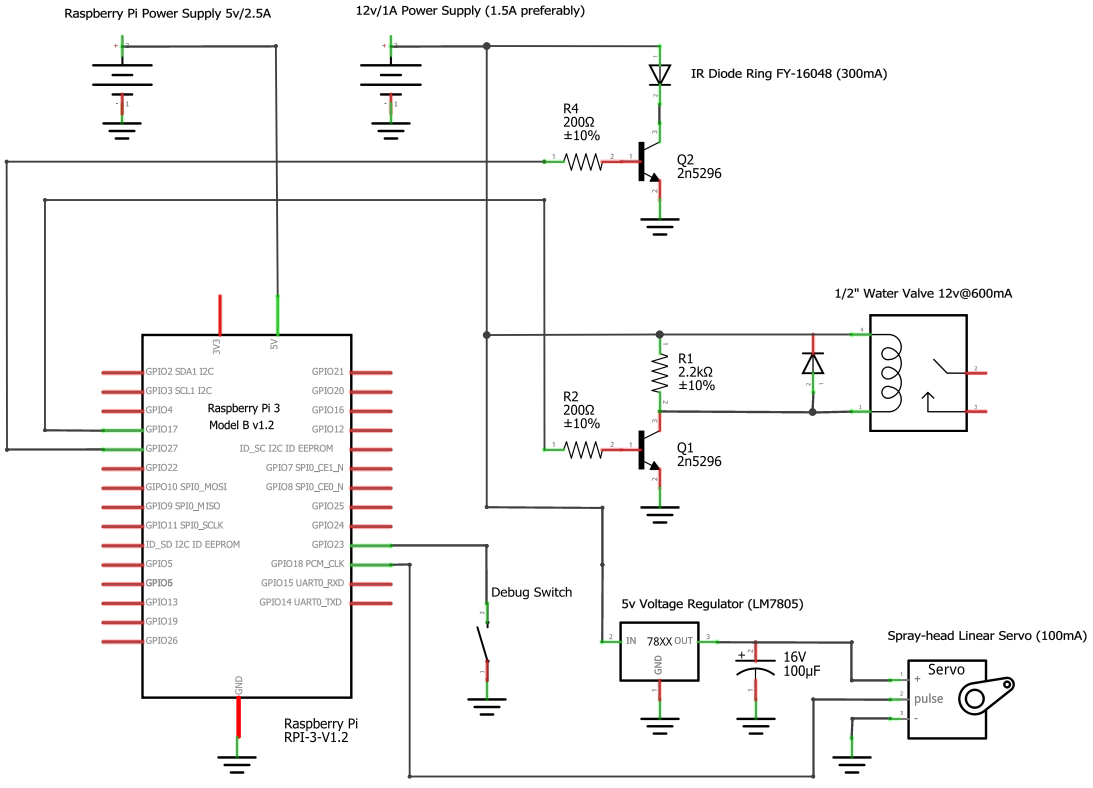
Raspberry Pi Power Supply 5v/2.5A
12v/1A Power Supply (1.5A preferably)
IR Diode Ring FY-16048 (300mA)
R4
200Ω
±10%
Q2
2n5296
1/2" Water Valve 12v@600mA
R1
2.2kΩ
±10%
R2
200Ω
±10%
Q1
2n5296
3V3
5V
GPIO2 SDA1 I2C
GPIO3 SCL1 I2C
GPIO4
GPIO17
GPIO27
GPIO22
GIPO10 SPI0_MOSI
GPIO9 SPI0_MISO
GPIO11 SPI0_SCLK
ID_SD I2C ID EEPROM
GPIO5
GPIO6
GPIO13
GPIO19
GPIO26
Raspberry Pi 3
Model B v1.2
GPIO21
GPIO20
GPIO16
GPIO12
ID_SC I2C ID EEPROM
GPIO7 SPI0_CE1_N
GPIO8 SPI0_CE0_N
GPIO25
GPIO24
GPIO23
GPIO18 PCM_CLK
GPIO15 UART0_RXD
GPIO14 UART0_TXD
GND
Raspberry Pi
RPI-3-V1.2
Debug Switch
5v Voltage Regulator (LM7805)
IN
78XX
OUT
GND
16V
100µF
Spray-head Linear Servo (100mA)
Servo
+
pulse
-
fritzing