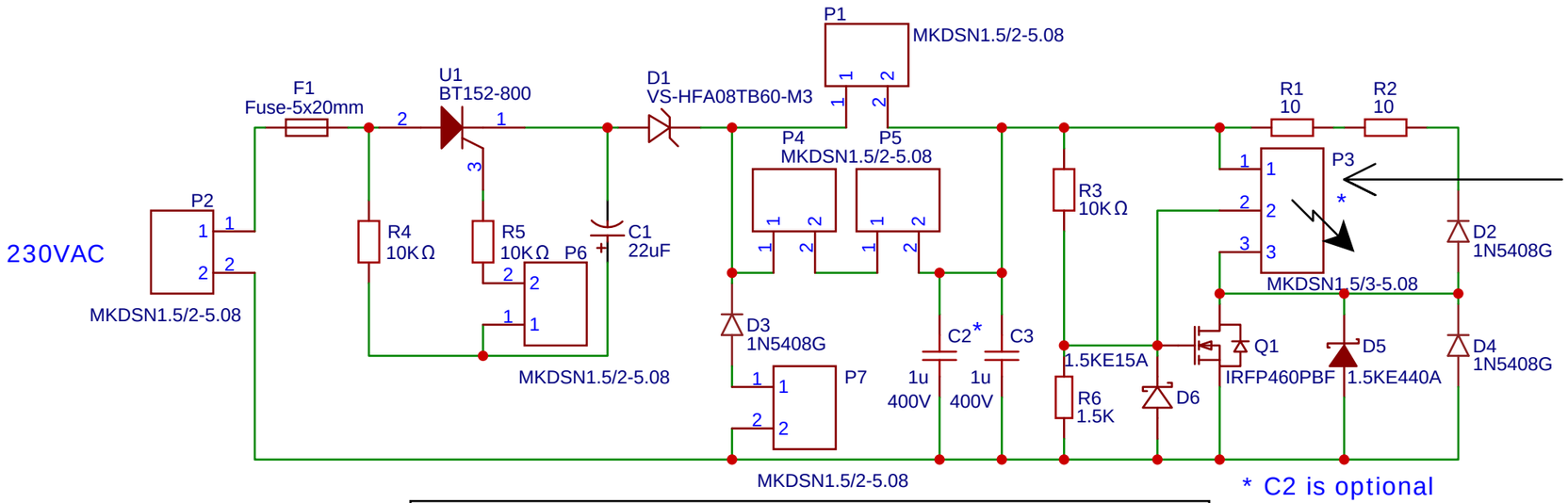

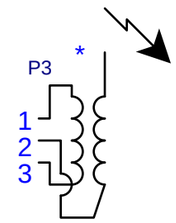

Secondary coil
Inner diameter 90mm
1000 windings AWG32

Primairy coil
Inner diameter 120mm
4 windings AWG12
Use Isolated wire!

*)Warning
Directly connected
To line input
230VAC
Don't touch! It might
kill you if you do!

* C2 is optional

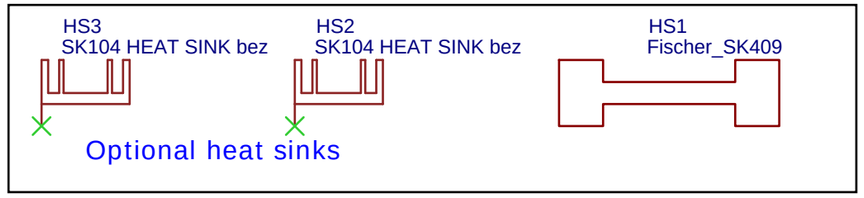

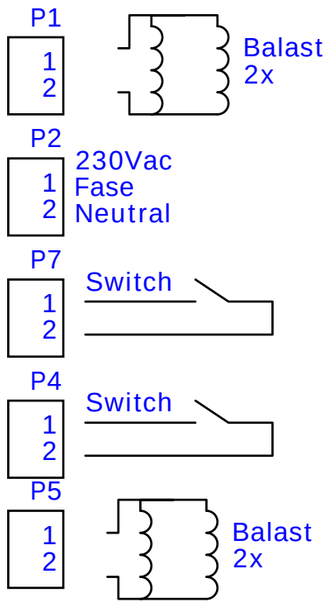

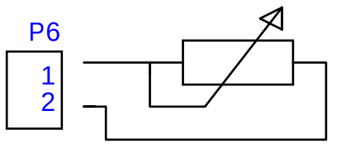

TITLE: Russian Slayer Exciter		REV: 2.0
EasyEDA	Company: The Electronic Engineer	Sheet: 1/1
	Date: 2022-01-04 Drawn By: Mark Donners	