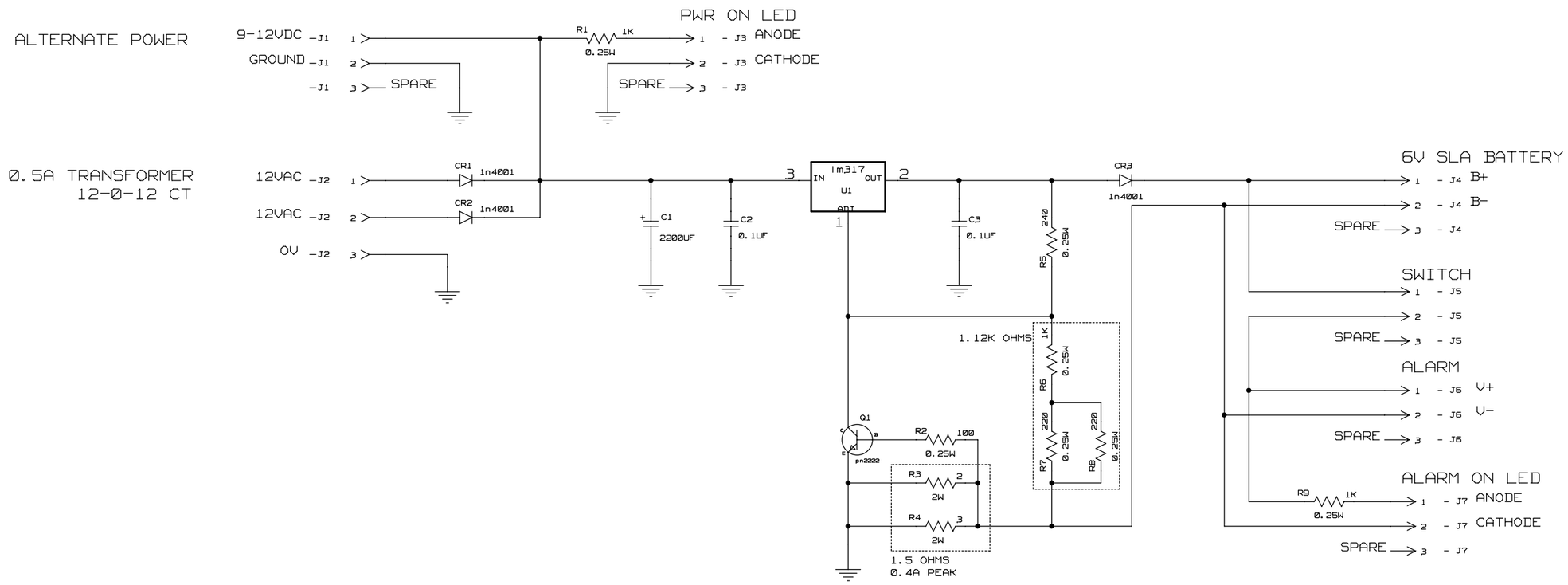

Tue Jan 12 16:37:55 2010

TITLE:	REV: A
6V SLA BATT. CHARGER	
SHEET: 01 OF 01	DESIGNER: JASON SIOQUIM
	DATE: 01/12/2010