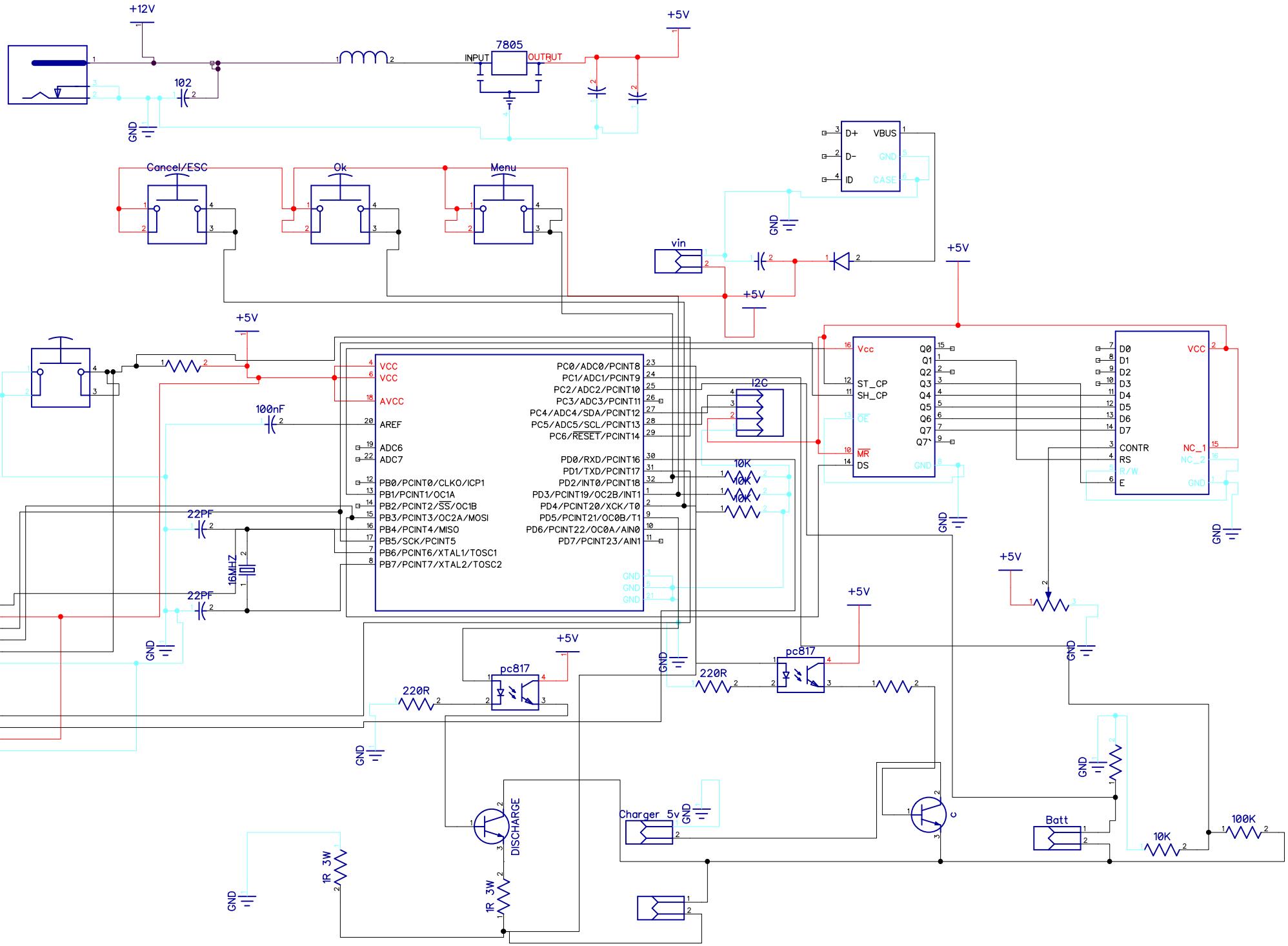
+12V
102
GND
7805
INPUT
OUTPUT
+5V
Cancel/ESC
Ok
Menu
D+
D-
ID
VBUS
GND
CASE
vin
+5V
GND
VCC
VCC
AVCC
AREF
ADC6
ADC7
PB0/PCINT0/CLKO/ICP1
PB1/PCINT1/OC1A
PB2/PCINT2/SS/OC1B
PB3/PCINT3/OC2A/MOSI
PB4/PCINT4/MISO
PB5/SCK/PCINT5
PB6/PCINT6/XTAL1/TOSC1
PB7/PCINT7/XTAL2/TOSC2
PC0/ADC0/PCINT8
PC1/ADC1/PCINT9
PC2/ADC2/PCINT10
PC3/ADC3/PCINT11
PC4/ADC4/SDA/PCINT12
PC5/ADC5/SCL/PCINT13
PC6/RESET/PCINT14
PD0/RXD/PCINT16
PD1/TXD/PCINT17
PD2/INT0/PCINT18
PD3/PCINT19/OC2B/INT1
PD4/PCINT20/XCK/T0
PD5/PCINT21/OC0B/T1
PD6/PCINT22/OC0A/AIN0
PD7/PCINT23/AIN1
100nF
22PF
16MHZ
ISP
UART
I2C
10K
Vcc
ST_CP
SH_CP
OE
MR
DS
Q0
Q1
Q2
Q3
Q4
Q5
Q6
Q7
Q7'
D0
D1
D2
D3
D4
D5
D6
D7
CONTR
RS
R/W
E
NC_1
NC_2
pc817
220R
DISCHARGE
1R 3W
Charger 5v
Batt
100K
c