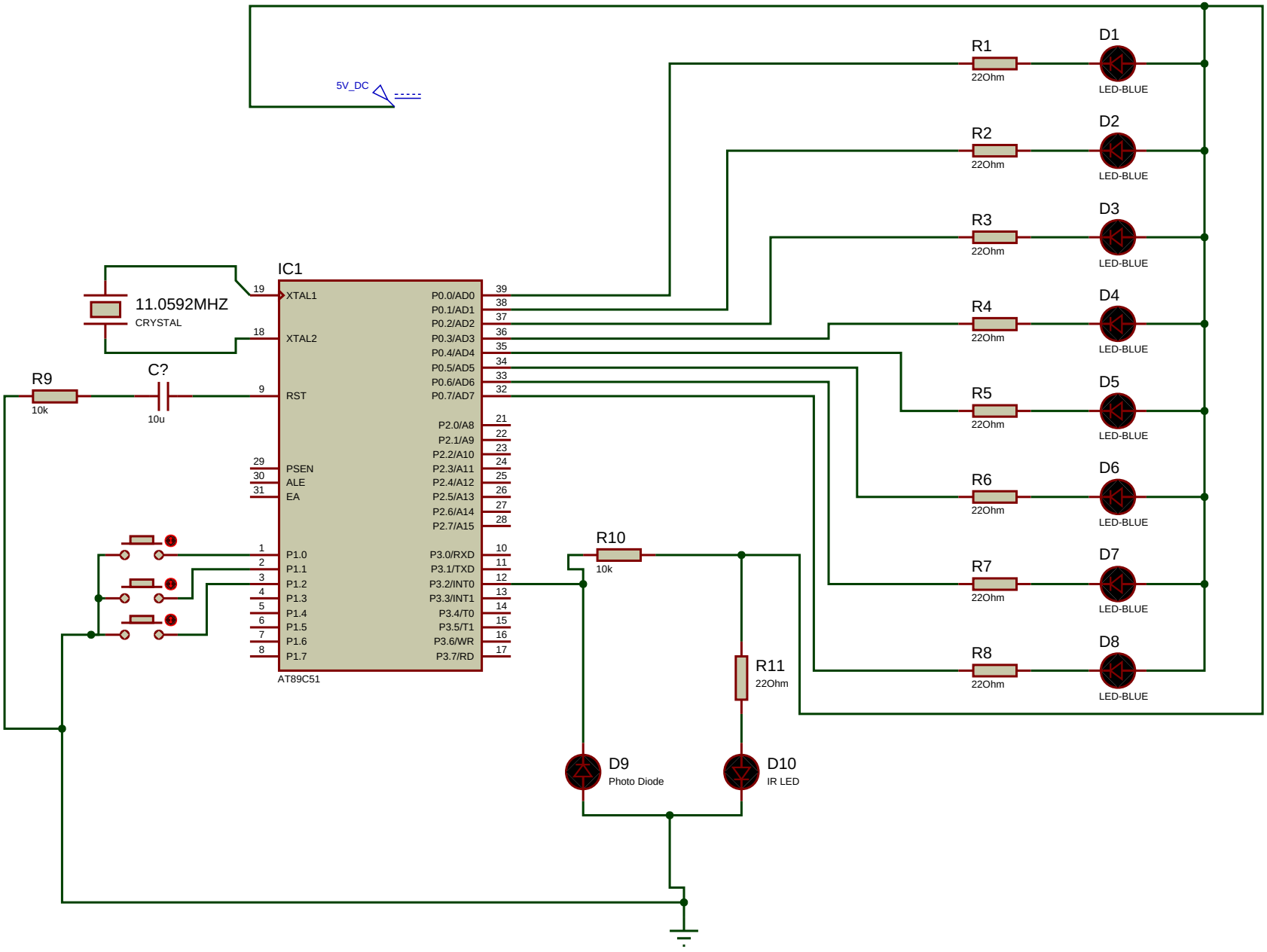
5V_DC
IC1
AT89C51
XTAL1
XTAL2
RST
PSEN
ALE
EA
P0.0/AD0
P0.1/AD1
P0.2/AD2
P0.3/AD3
P0.4/AD4
P0.5/AD5
P0.6/AD6
P0.7/AD7
P2.0/A8
P2.1/A9
P2.2/A10
P2.3/A11
P2.4/A12
P2.5/A13
P2.6/A14
P2.7/A15
P1.0
P1.1
P1.2
P1.3
P1.4
P1.5
P1.6
P1.7
P3.0/RXD
P3.1/TXD
P3.2/INT0
P3.3/INT1
P3.4/T0
P3.5/T1
P3.6/WR
P3.7/RD
11.0592MHZ
CRYSTAL
R9
10k
C?
10u
R1
R2
R3
R4
R5
R6
R7
R8
22Ohm
D1
D2
D3
D4
D5
D6
D7
D8
LED-BLUE
R10
10k
R11
22Ohm
D9
Photo Diode
D10
IR LED