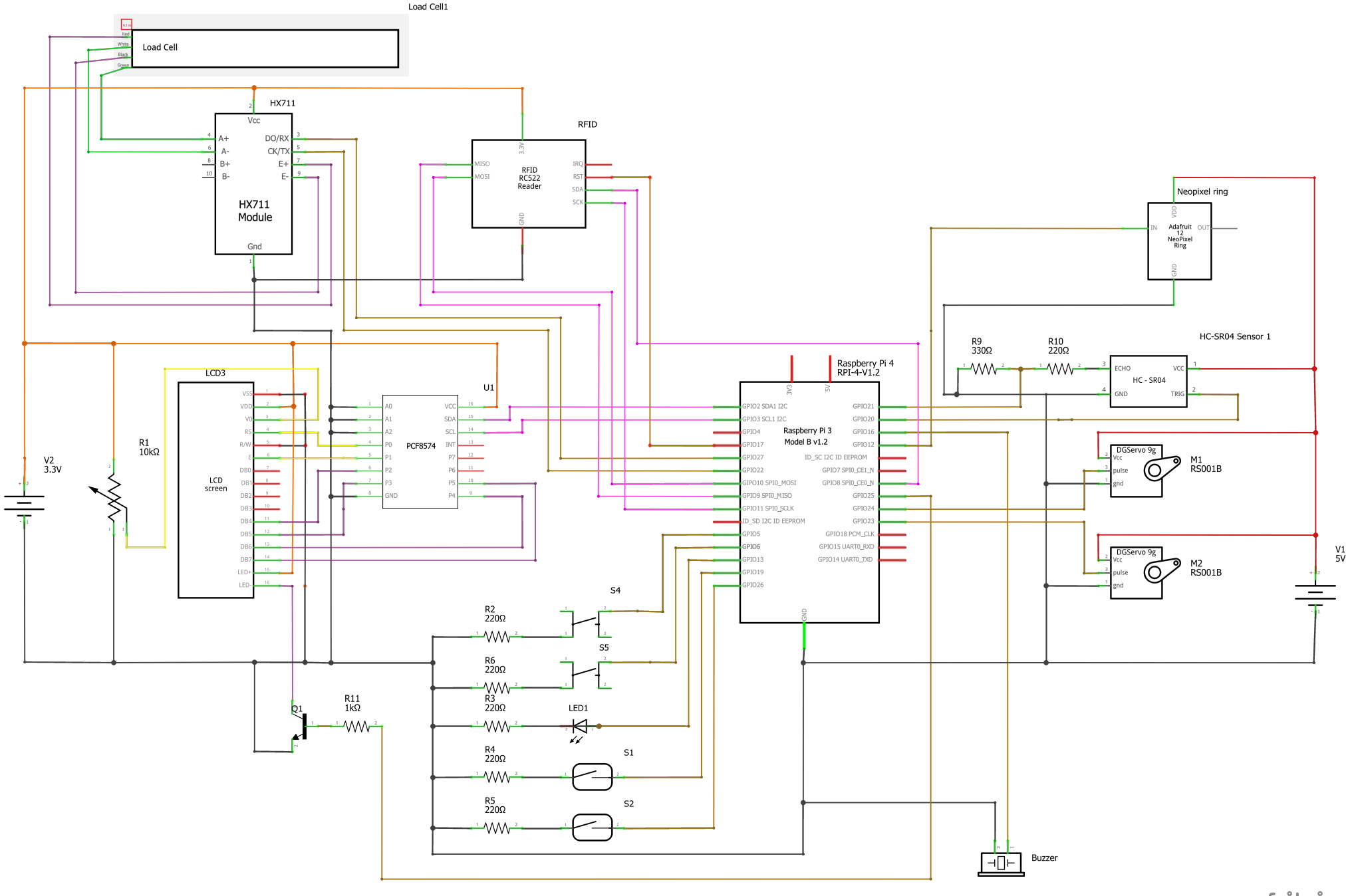
Load Cell1
Load Cell
Red
White
Black
Green
HX711
Vcc
A+
A-
B+
B-
DO/RX
CK/TX
E+
E-
HX711
Module
Gnd
RFID
MISO
MOSI
3.3V
RFID
RC522
Reader
IRQ
RST
SDA
SCK
GND
Neopixel ring
VDD
IN
Adafruit
12
NeoPixel
Ring
OUT
GND
R9
330Ω
R10
220Ω
HC-SR04 Sensor 1
ECHO
VCC
HC - SR04
GND
TRIG
LCD3
VSS
VDD
V0
RS
R/W
E
DB0
DB1
DB2
DB3
DB4
DB5
DB6
DB7
LED+
LED-
LCD
screen
U1
A0
A1
A2
P0
P1
P2
P3
GND
PCF8574
VCC
SDA
SCL
INT
P7
P6
P5
P4
Raspberry Pi 4
RPI-4-V1.2
3V3
5V
GPIO2 SDA1 I2C
GPIO3 SCL1 I2C
GPIO4
GPIO17
GPIO27
GPIO22
GIPO10 SPI0_MOSI
GPIO9 SPI0_MISO
GPIO11 SPI0_SCLK
ID_SD I2C ID EEPROM
GPIO5
GPIO6
GPIO13
GPIO19
GPIO26
Raspberry Pi 3
Model B v1.2
GPIO21
GPIO20
GPIO16
GPIO12
ID_SC I2C ID EEPROM
GPIO7 SPI0_CE1_N
GPIO8 SPI0_CE0_N
GPIO25
GPIO24
GPIO23
GPIO18 PCM_CLK
GPIO15 UART0_RXD
GPIO14 UART0_TXD
GND
DGServo 9g
Vcc
pulse
gnd
M1
RS001B
M2
RS001B
V2
3.3V
R1
10kΩ
V1
5V
S4
S5
R2
220Ω
R6
220Ω
R3
220Ω
LED1
R4
220Ω
S1
R5
220Ω
S2
Q1
R11
1kΩ
Buzzer
fritzing