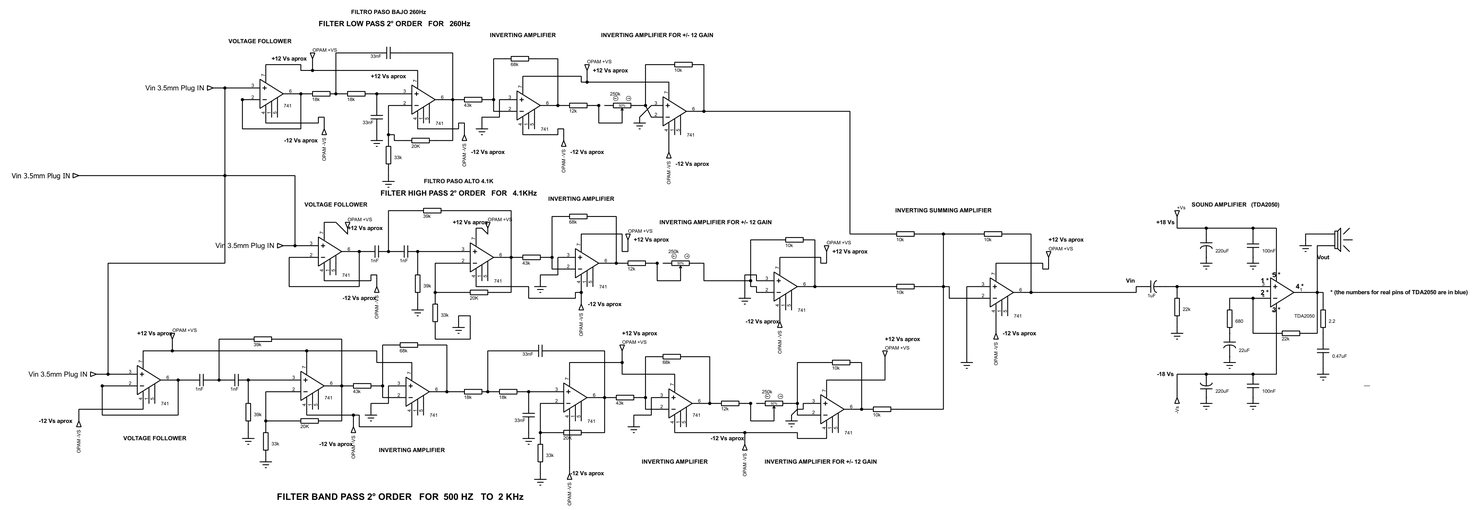

SOURCING SUPPLY for TDA2050

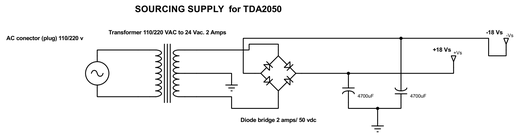

negative sourcing for the opams 741

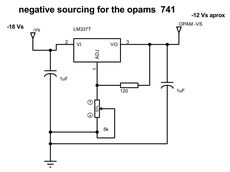
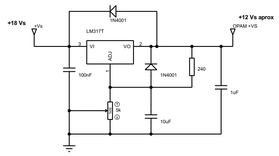
positive sourcing for the opams 741