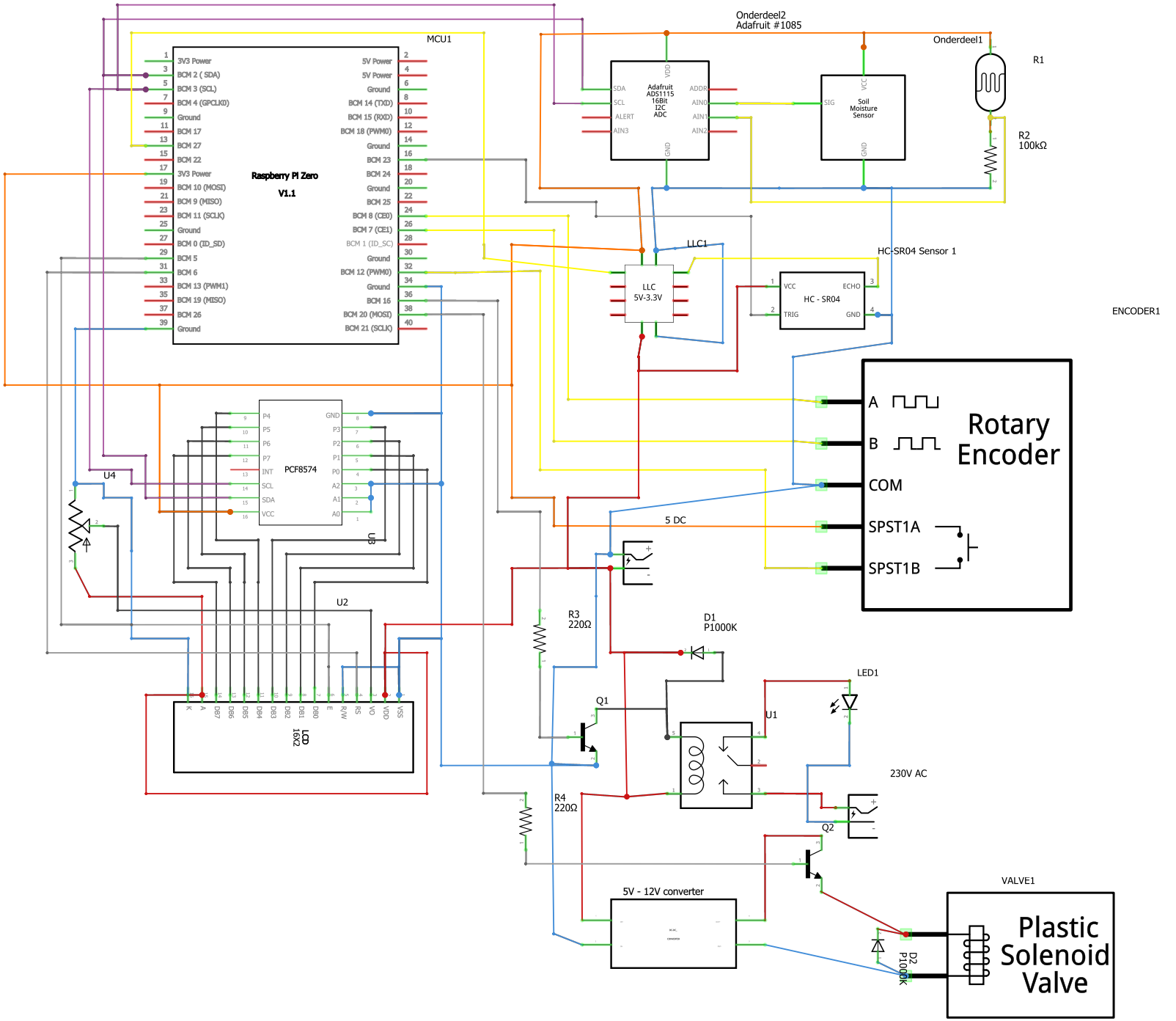
MCU1
Raspberry Pi Zero
V1.1
3V3 Power
BCM 2 (SDA)
BCM 3 (SCL)
BCM 4 (GPCLK0)
Ground
BCM 17
BCM 27
BCM 22
3V3 Power
BCM 10 (MOSI)
BCM 9 (MISO)
BCM 11 (SCLK)
Ground
BCM 0 (ID_SD)
BCM 5
BCM 6
BCM 13 (PWM1)
BCM 19 (MISO)
BCM 26
Ground
5V Power
5V Power
Ground
BCM 14 (TXD)
BCM 15 (RXD)
BCM 18 (PWM0)
Ground
BCM 23
BCM 24
Ground
BCM 25
BCM 8 (CE0)
BCM 7 (CE1)
BCM 1 (ID_SC)
Ground
BCM 12 (PWM0)
Ground
BCM 16
BCM 20 (MOSI)
BCM 21 (SCLK)
Onderdeel2
Adafruit #1085
Adafruit
ADS1115
16Bit
I2C
ADC
SDA
SCL
ALERT
AIN3
VDD
GND
ADDR
AIN0
AIN1
AIN2
Onderdeel1
Soil
Moisture
Sensor
SIG
VCC
GND
R1
R2
100kΩ
LLC1
LLC
5V-3.3V
HC-SR04 Sensor 1
HC - SR04
VCC
TRIG
ECHO
GND
ENCODER1
Rotary
Encoder
A
B
COM
SPST1A
SPST1B
PCF8574
P4
P5
P6
P7
INT
SCL
SDA
VCC
GND
P3
P2
P1
P0
A2
A1
A0
U4
U3
U2
5 DC
R3
220Ω
D1
P1000K
LED1
Q1
U1
LCD
16X2
K
A
DB7
DB6
DB5
DB4
DB3
DB2
DB1
DB0
E
R/W
RS
VO
VDD
VSS
230V AC
R4
220Ω
Q2
5V - 12V converter
VALVE1
Plastic
Solenoid
Valve
D2
P1000K

fritzing