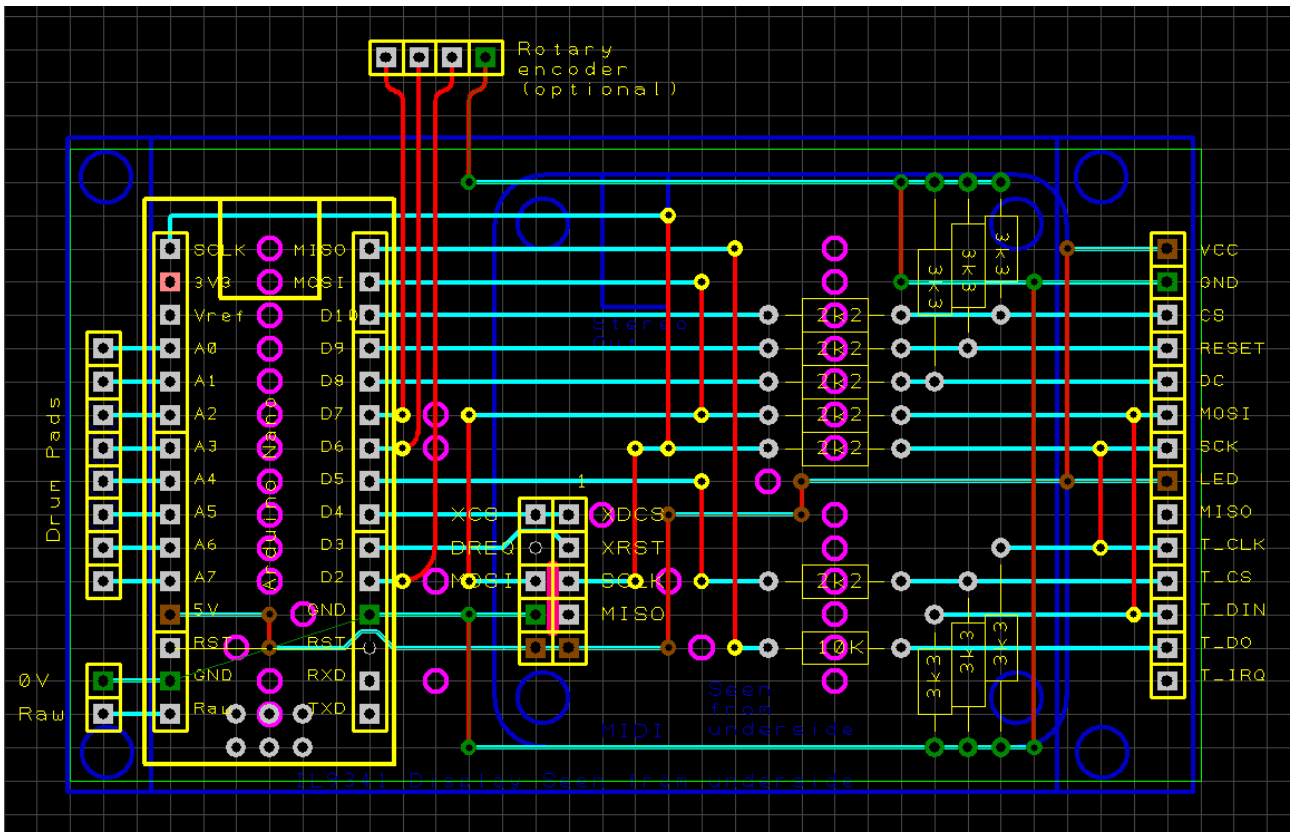
Rotary
encoder
(optional)
Drum Pads
0V
Raw
SCLK
3V3
Vref
A0
A1
A2
A3
A4
A5
A6
A7
5V
RST
GND
Raw
MISO
MOSI
D10
D9
D8
D7
D6
D5
D4
D3
D2
GND
RST
RXD
TXD
XCS
DREQ
MOSI
DCS
XRST
SCLK
MISO
Stereo
Out
MIDI
Seen
from
underside
2K2
10K
3K3
VCC
GND
CS
RESET
DC
MOSI
SCK
LED
MISO
T_CLK
T_CS
T_DIN
T_DO
T_IRQ
ILI9341 Display Seen from underside