GAS Sensor Board
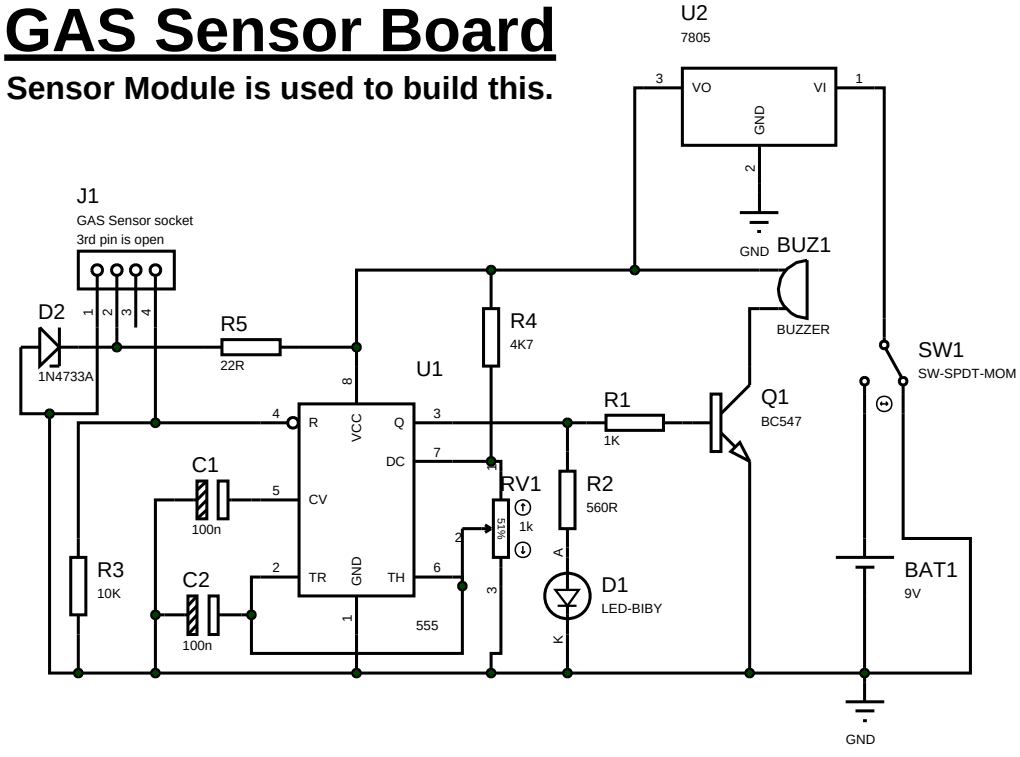
Sensor Module is used to build this.