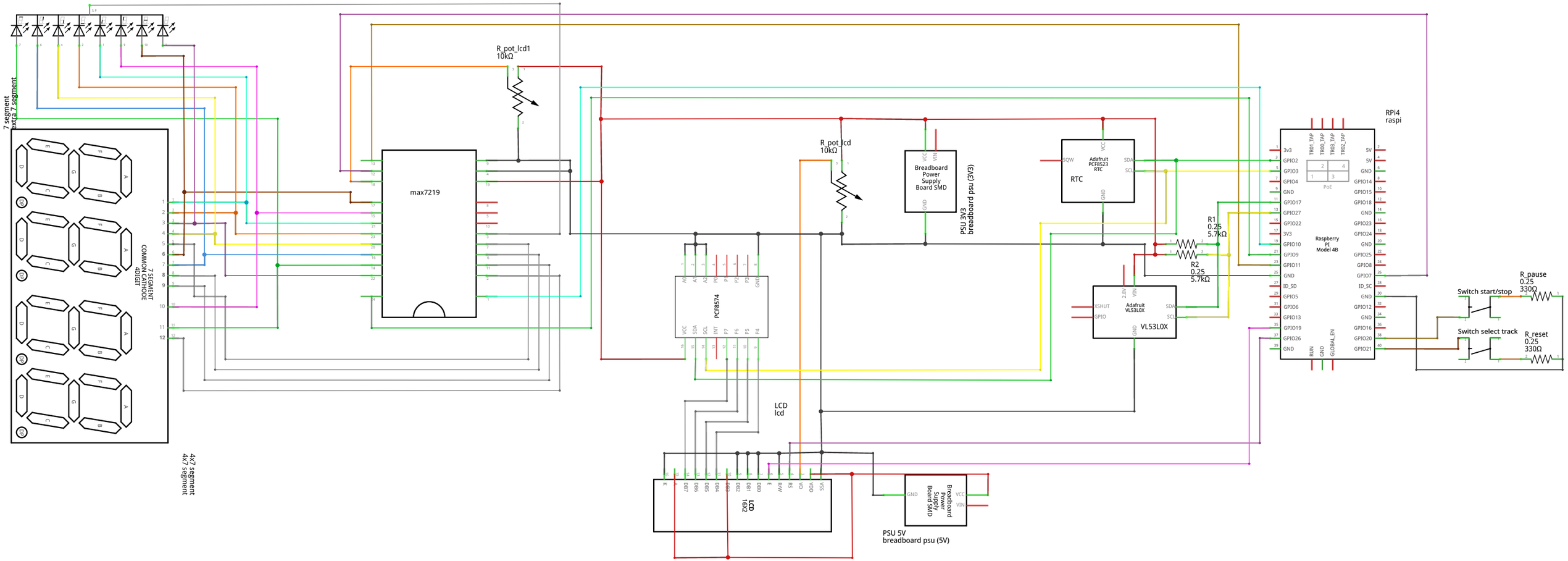
7 segment
4x7 segment
7 SEGMENT
COMMON CATHODE
4DIGIT
4x7 segment
4x7 segment
R_pot_lcd1
10kΩ
max7219
R_pot_lcd
10kΩ
Breadboard
Power
Supply
Board SMD
PSU 3V3
breadboard psu (3V3)
Adafruit
PCF8523
RTC
RTC
R1
0.25
5.7kΩ
R2
0.25
5.7kΩ
Adafruit
VL53L0X
VL53L0X
PCF8574
LCD
lcd
LCD
16x2
Breadboard
Power
Supply
Board SMD
PSU 5V
breadboard psu (5V)
RPi4
raspi
Raspberry
Pi
Model 4B
Switch start/stop
R_pause
0.25
330Ω
Switch select track
R_reset
0.25
330Ω
fritzing