PRODUCED BY AN AUTODESK EDUCATIONAL PRODUCT

NOTE:

1. DEBUR ALL SHARP EDGES AND CORNERS

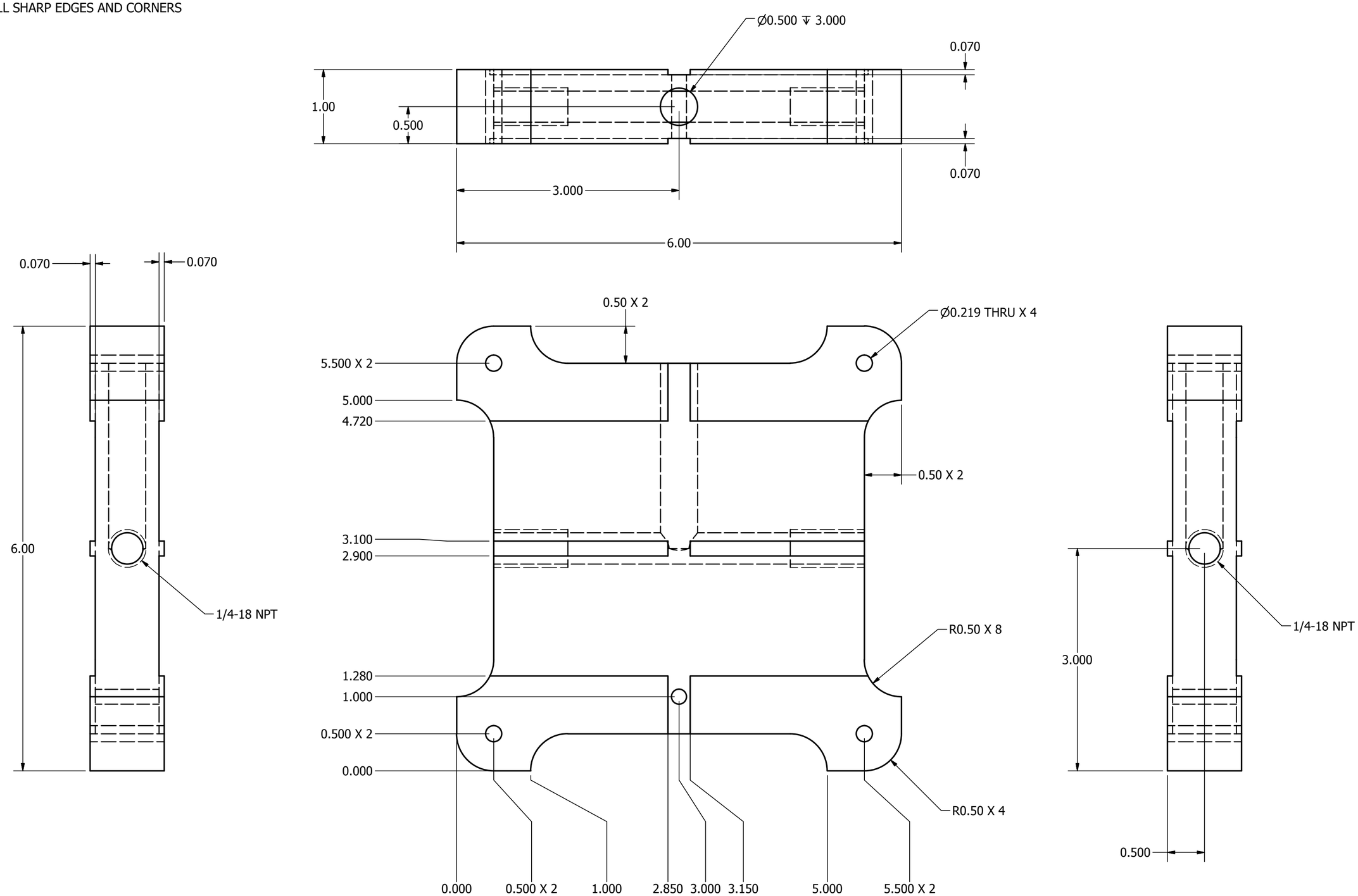


| | | |
|---|---|---|
| DRAWN ISAAC | 10/5/2006 | |
| | TOLERANCE: X: ± .015 XX: ± .010 XXX: ± .005 ENGLISH | TITLE CHILL BLOCK BACKUP |
| MATERIAL MIC-6 ALUM | | |
| FINISH CLEAR ANODIZE | | SIZE C / DWG NO cb_backup / REV A |
| | | SCALE / SHEET 1 OF 2 |

PRODUCED BY AN AUTODESK EDUCATIONAL PRODUCT
PRODUCED BY AN AUTODESK EDUCATIONAL PRODUCT
PRODUCED BY AN AUTODESK EDUCATIONAL PRODUCT