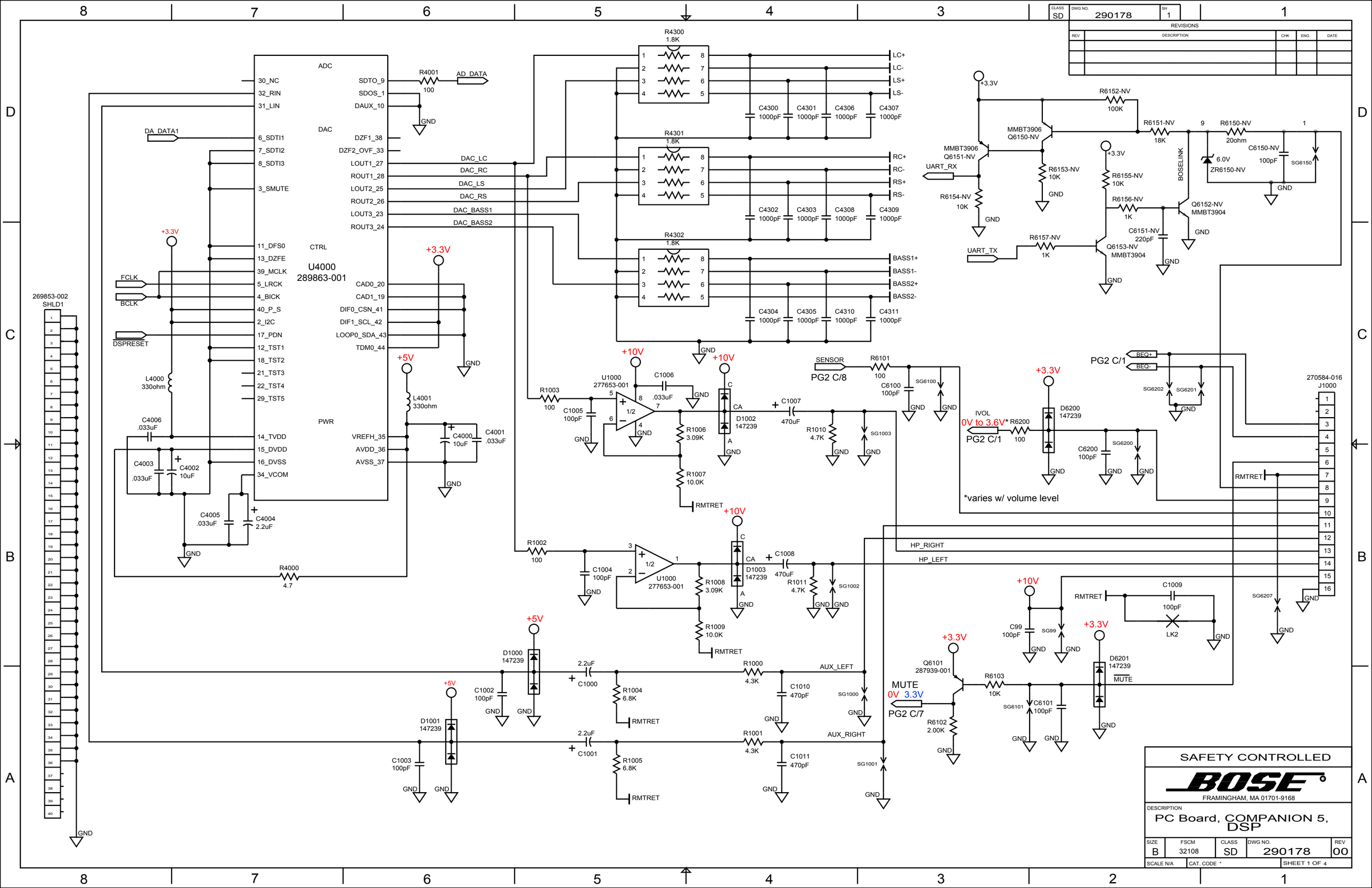
CLASS SD
DWG NO. 290178
SH 1
REVISIONS
REV DESCRIPTION CHK ENG DATE
U4000
289863-001
ADC
DAC
CTRL
PWR
SDTO_9
SDOS_1
DAUX_10
DZF1_38
DZF2_OVF_33
LOUT1_27
ROUT1_28
LOUT2_25
ROUT2_26
LOUT3_23
ROUT3_24
CAD0_20
CAD1_19
DIF0_CSN_41
DIF1_SCL_42
LOOP0_SDA_43
TDM0_44
VREFH_35
AVDD_36
AVSS_37
30_NC
32_RIN
31_LIN
6_SDTI1
7_SDTI2
8_SDTI3
3_SMUTE
11_DFS0
13_DZFE
39_MCLK
5_LRCK
4_BICK
40_P_S
2_I2C
17_PDN
12_TST1
18_TST2
21_TST3
22_TST4
29_TST5
14_TVDD
15_DVDD
16_DVSS
34_VCOM
DA_DATA1
FCLK
BCLK
DSPRESET
AD_DATA
DAC_LC
DAC_RC
DAC_LS
DAC_RS
DAC_BASS1
DAC_BASS2
R4300 1.8K
R4301 1.8K
R4302 1.8K
LC+
LC-
LS+
LS-
RC+
RC-
RS+
RS-
BASS1+
BASS1-
BASS2+
BASS2-
C4300 1000pF
C4301 1000pF
C4306 1000pF
C4307 1000pF
C4302 1000pF
C4303 1000pF
C4308 1000pF
C4309 1000pF
C4304 1000pF
C4305 1000pF
C4310 1000pF
C4311 1000pF
269853-002
SHLD1
L4000 330ohm
L4001 330ohm
C4006 .033uF
C4003 .033uF
C4002 10uF
C4005 .033uF
C4004 2.2uF
C4000 10uF
C4001 .033uF
R4000 4.7
R4001 100
+3.3V
+5V
+10V
GND
RMTRET
U1000
277653-001
1/2
R1003 100
C1005 100pF
C1006 .033uF
R1006 3.09K
R1007 10.0K
D1002 147239
C1007 470uF
R1010 4.7K
SG1003
SENSOR
PG2 C/8
R6101 100
C6100 100pF
SG6100
R1002 100
C1004 100pF
R1008 3.09K
R1009 10.0K
D1003 147239
C1008 470uF
R1011 4.7K
SG1002
D1000 147239
D1001 147239
C1002 100pF
C1003 100pF
2.2uF
C1000
C1001
R1004 6.8K
R1005 6.8K
R1000 4.3K
R1001 4.3K
C1010 470pF
C1011 470pF
AUX_LEFT
AUX_RIGHT
SG1000
SG1001
HP_RIGHT
HP_LEFT
R6152-NV 100K
R6151-NV 18K
R6150-NV 20ohm
MMBT3906 Q6150-NV
MMBT3906 Q6151-NV
UART_RX
UART_TX
R6153-NV 10K
R6154-NV 10K
R6155-NV 10K
R6156-NV 1K
R6157-NV 1K
Q6152-NV MMBT3904
Q6153-NV MMBT3904
C6151-NV 220pF
C6150-NV 100pF
6.0V ZR6150-NV
SG6150
BOSELINK
IVOL
0V to 3.6V*
PG2 C/1
R6200 100
D6200 147239
C6200 100pF
SG6200
*varies w/ volume level
PG2 C/1
BEQ+
BEQ-
SG6202
SG6201
270584-016
J1000
RMTRET
SG6207
C1009 100pF
LK2
C99 100pF
SG99
Q6101 287939-001
MUTE
0V 3.3V
PG2 C/7
R6103 10K
R6102 2.00K
C6101 100pF
SG6101
D6201 147239
MUTE
SAFETY CONTROLLED
BOSE
FRAMINGHAM, MA 01701-9168
DESCRIPTION
PC Board, COMPANION 5, DSP
SIZE B
FSCM 32108
CLASS SD
DWG NO. 290178
REV 00
SCALE N/A
CAT. CODE *
SHEET 1 OF 4

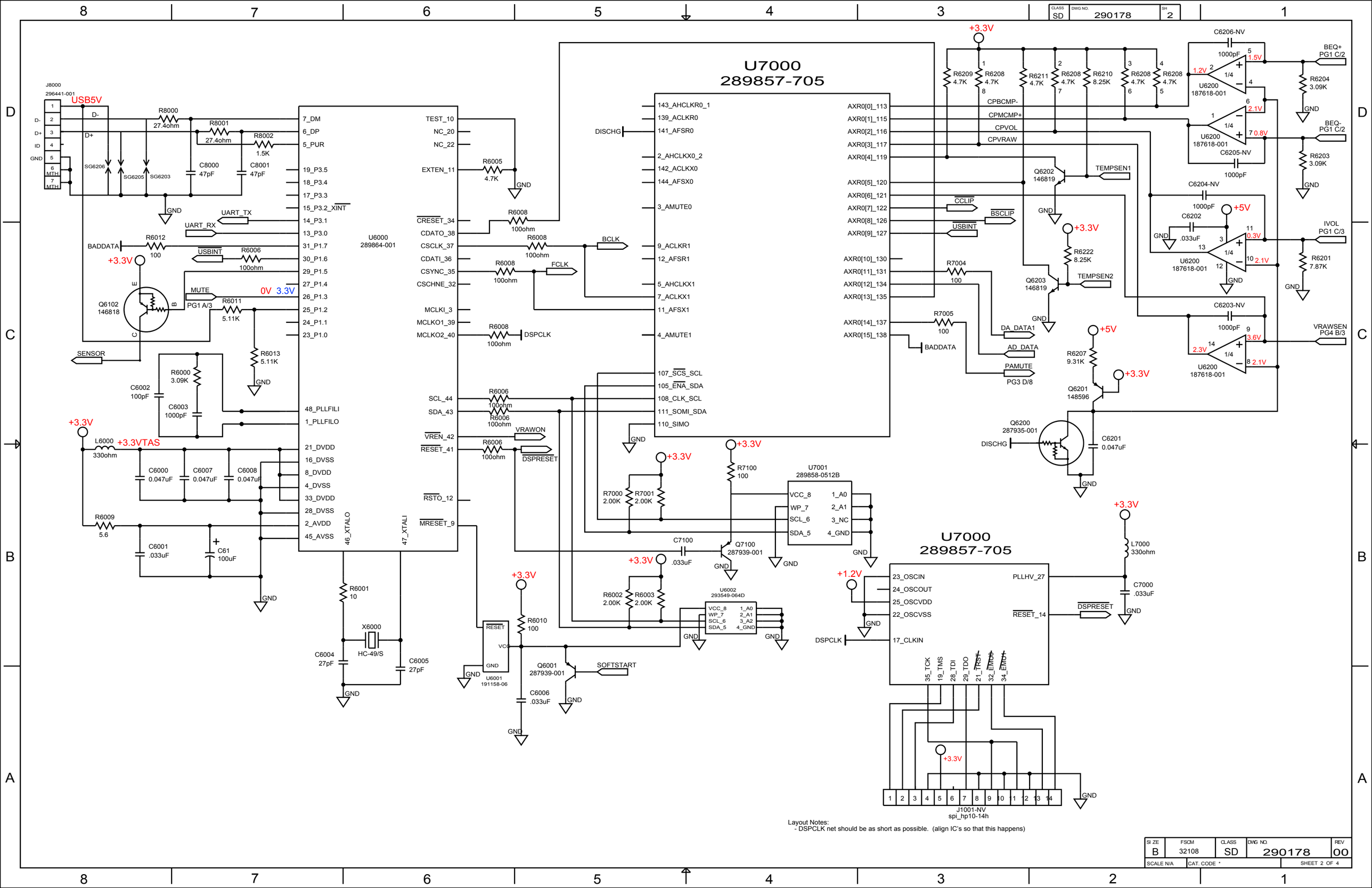
CLASS SD
DWG NO. 290178
SH 2
J8000
296441-001
USB5V
D-
D+
ID
GND
MTH
R8000
27.4ohm
R8001
27.4ohm
R8002
1.5K
SG6206
SG6205
SG6203
C8000
47pF
C8001
47pF
U6000
289864-001
7_DM
6_DP
5_PUR
19_P3.5
18_P3.4
17_P3.3
15_P3.2_XINT
14_P3.1
13_P3.0
31_P1.7
30_P1.6
29_P1.5
27_P1.4
26_P1.3
25_P1.2
24_P1.1
23_P1.0
48_PLLFILI
1_PLLFILO
21_DVDD
16_DVSS
8_DVDD
4_DVSS
33_DVDD
28_DVSS
2_AVDD
45_AVSS
46_XTALO
47_XTALI
TEST_10
NC_20
NC_22
EXTEN_11
CRESET_34
CDATO_38
CSCLK_37
CDATI_36
CSYNC_35
CSCHNE_32
MCLKI_3
MCLKO1_39
MCLKO2_40
SCL_44
SDA_43
VREN_42
RESET_41
RSTO_12
MRESET_9
UART_TX
UART_RX
BADDATA
R6012
100
USBINT
R6006
100ohm
+3.3V
Q6102
146818
MUTE
PG1 A/3
R6011
5.11K
0V 3.3V
R6013
5.11K
SENSOR
R6000
3.09K
C6002
100pF
C6003
1000pF
L6000
330ohm
+3.3VTAS
C6000
0.047uF
C6007
0.047uF
C6008
0.047uF
R6009
5.6
C6001
.033uF
C61
100uF
R6001
10
X6000
HC-49/S
C6004
27pF
C6005
27pF
R6005
4.7K
R6008
100ohm
BCLK
FCLK
DSPCLK
VRAWON
DSPRESET
U7000
289857-705
143_AHCLKR0_1
139_ACLKR0
141_AFSR0
2_AHCLKX0_2
142_ACLKX0
144_AFSX0
3_AMUTE0
9_ACLKR1
12_AFSR1
5_AHCLKX1
7_ACLKX1
11_AFSX1
4_AMUTE1
107_SCS_SCL
105_ENA_SDA
108_CLK_SCL
111_SOMI_SDA
110_SIMO
DISCHG
AXR0[0]_113
AXR0[1]_115
AXR0[2]_116
AXR0[3]_117
AXR0[4]_119
AXR0[5]_120
AXR0[6]_121
AXR0[7]_122
AXR0[8]_126
AXR0[9]_127
AXR0[10]_130
AXR0[11]_131
AXR0[12]_134
AXR0[13]_135
AXR0[14]_137
AXR0[15]_138
CPBCMP-
CPCMP+
CPVOL
CPVRAW
CCLIP
BSCLIP
USBINT
R6209
4.7K
R6208
4.7K
R6211
4.7K
R6210
8.25K
C6206-NV
1000pF
U6200
187618-001
1/4
1.2V
1.5V
2.1V
0.8V
BEQ+
PG1 C/2
R6204
3.09K
BEQ-
PG1 C/2
R6203
3.09K
C6205-NV
Q6202
146819
TEMPSEN1
C6204-NV
C6202
.033uF
+5V
0.3V
IVOL
PG1 C/3
R6201
7.87K
R6222
8.25K
Q6203
146819
TEMPSEN2
R7004
100
R7005
100
DA_DATA1
AD_DATA
PAMUTE
PG3 D/8
C6203-NV
3.6V
2.3V
VRAWSEN
PG4 B/3
R6207
9.31K
Q6201
148596
Q6200
287935-001
C6201
0.047uF
R7000
2.00K
R7001
2.00K
R7100
100
U7001
289858-0512B
VCC_8
WP_7
SCL_6
SDA_5
1_A0
2_A1
3_NC
4_GND
C7100
.033uF
Q7100
287939-001
R6002
2.00K
R6003
2.00K
U6002
293549-064D
1_A0
2_A1
3_A2
4_GND
R6010
100
RESET
VCC
U6001
191158-06
Q6001
287939-001
SOFTSTART
C6006
.033uF
+1.2V
23_OSCIN
24_OSCOUT
25_OSCVDD
22_OSCVSS
17_CLKIN
PLLHV_27
RESET_14
L7000
330ohm
C7000
.033uF
35_TCK
19_TMS
28_TDI
29_TDO
21_TRST
32_EMU0
34_EMU1
J1001-NV
spi_hp10-14h
Layout Notes:
- DSPCLK net should be as short as possible. (align IC's so that this happens)
SIZE B
FSCM 32108
CLASS SD
DWG NO. 290178
REV 00
SCALE N/A
CAT. CODE *
SHEET 2 OF 4

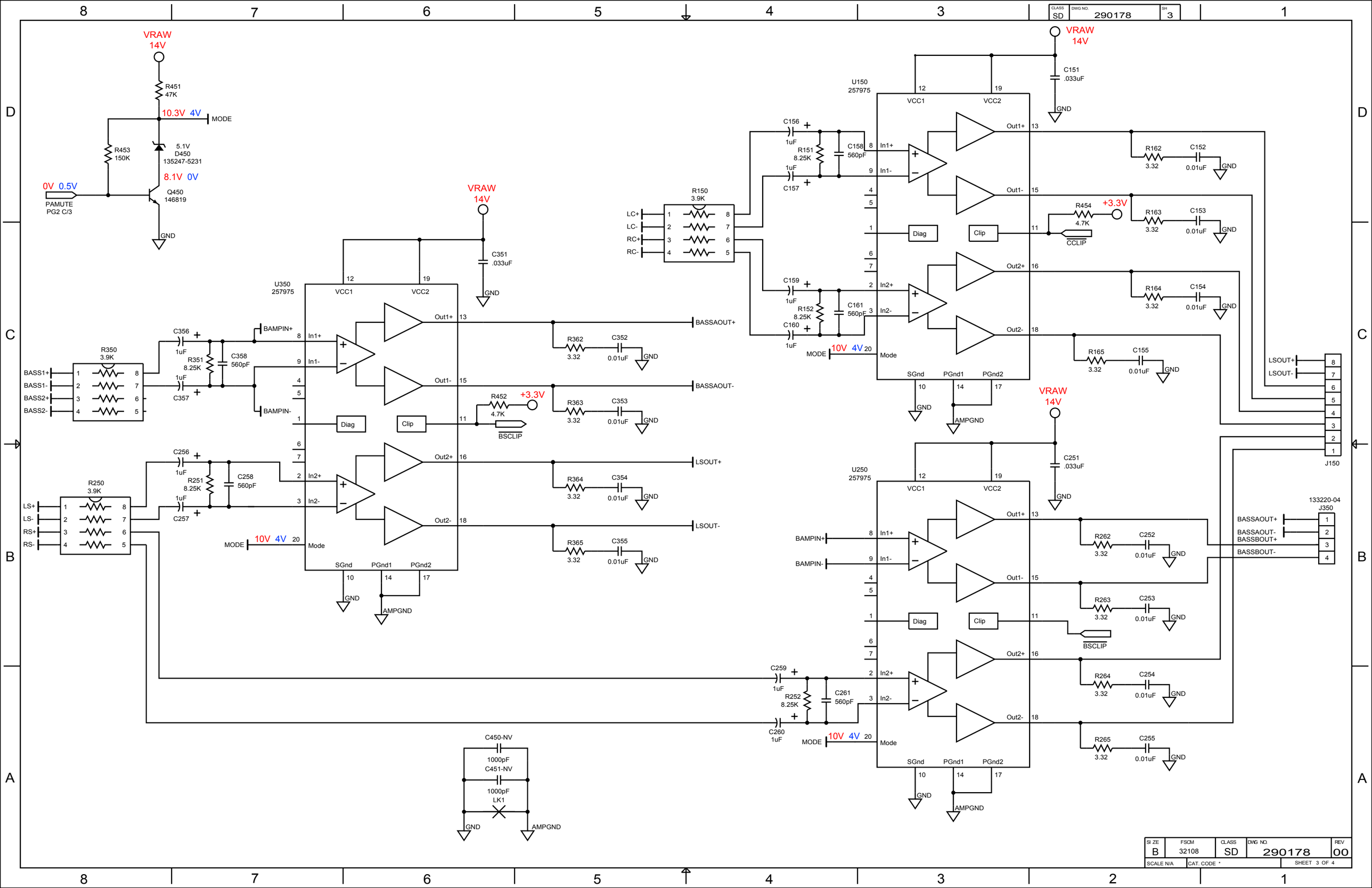
CLASS SD
DWG NO. 290178
SH 3
VRAW 14V
R451 47K
10.3V 4V
MODE
R453 150K
5.1V D450 135247-5231
8.1V 0V
0V 0.5V
PAMUTE PG2 C/3
Q450 146819
GND
U150 257975
VCC1
VCC2
C151 .033uF
C156 1uF
R151 8.25K
C158 560pF
C157 1uF
In1+
In1-
Out1+
Out1-
R162 3.32
C152 0.01uF
R454 4.7K
+3.3V
CCLIP
R163 3.32
C153 0.01uF
Diag
Clip
Out2+
Out2-
R164 3.32
C154 0.01uF
C159 1uF
R152 8.25K
C161 560pF
C160 1uF
In2+
In2-
Mode
R165 3.32
C155 0.01uF
SGnd
PGnd1
PGnd2
AMPGND
LSOUT+
LSOUT-
J150
R150 3.9K
LC+
LC-
RC+
RC-
VRAW 14V
C351 .033uF
U350 257975
BAMPIN+
BAMPIN-
C356 1uF
R351 8.25K
C358 560pF
C357 1uF
R350 3.9K
BASS1+
BASS1-
BASS2+
BASS2-
R362 3.32
C352 0.01uF
BASSAOUT+
R452 4.7K
+3.3V
BSCLIP
R363 3.32
C353 0.01uF
BASSAOUT-
C256 1uF
R251 8.25K
C258 560pF
C257 1uF
R250 3.9K
LS+
LS-
RS+
RS-
R364 3.32
C354 0.01uF
LSOUT+
R365 3.32
C355 0.01uF
LSOUT-
C450-NV
1000pF
C451-NV
1000pF
LK1
U250 257975
VRAW 14V
C251 .033uF
BAMPIN+
BAMPIN-
R262 3.32
C252 0.01uF
R263 3.32
C253 0.01uF
BSCLIP
R264 3.32
C254 0.01uF
R265 3.32
C255 0.01uF
133220-04
J350
BASSAOUT+
BASSAOUT-
BASSBOUT+
BASSBOUT-
C259 1uF
R252 8.25K
C261 560pF
C260 1uF
SIZE B
FSCM 32108
CLASS SD
DWG NO. 290178
REV 00
SCALE N/A
CAT. CODE *
SHEET 3 OF 4

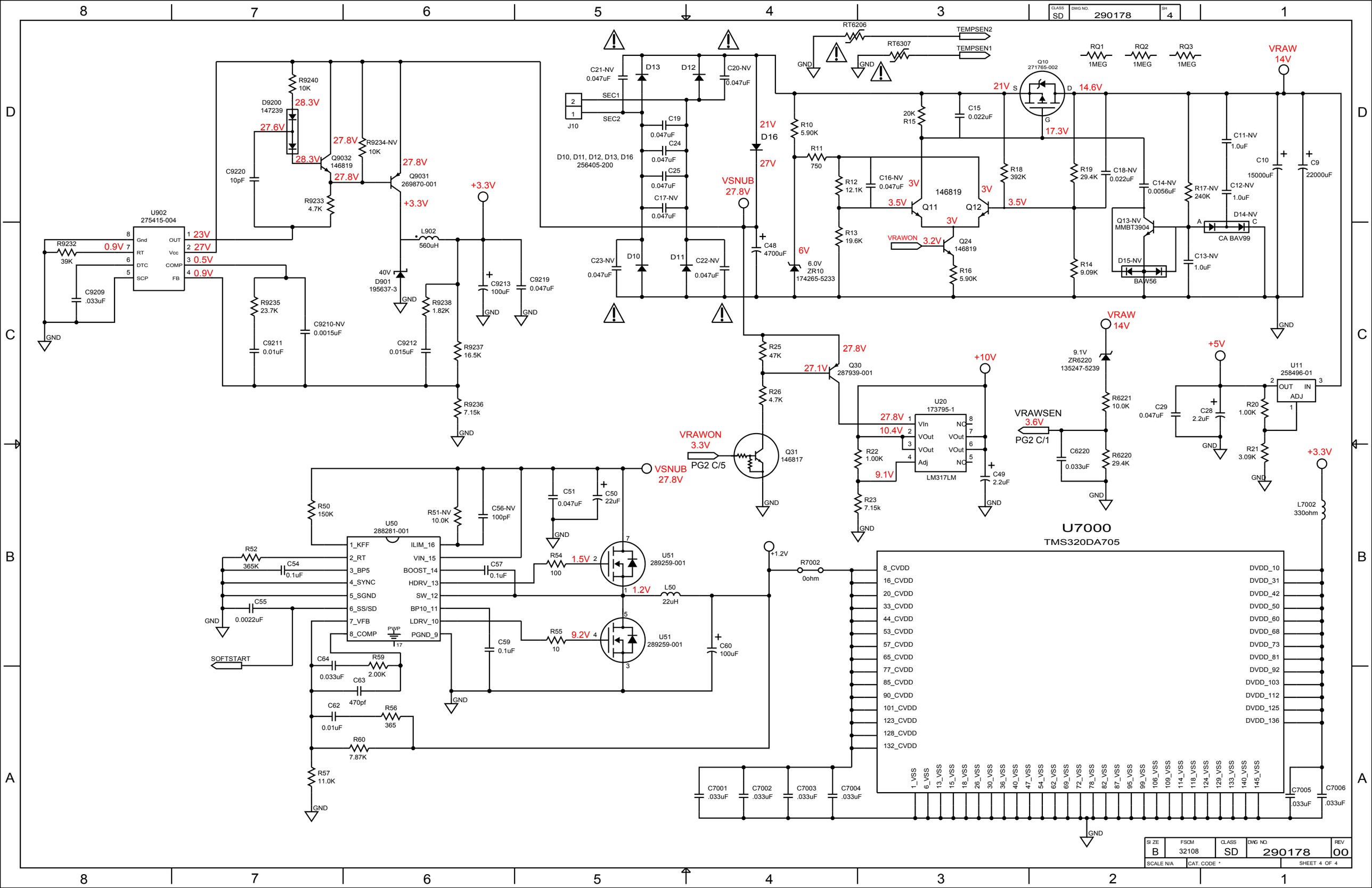
CLASS SD
DWG NO. 290178
SH 4
U902
275415-004
Gnd
RT
DTC
SCP
OUT
Vcc
COMP
FB
23V
27V
0.5V
0.9V
0.9V
R9232
39K
C9209
.033uF
R9240
10K
D9200
147239
28.3V
27.6V
28.3V
Q9032
146819
27.8V
27.8V
27.8V
R9234-NV
10K
Q9031
269870-001
C9220
10pF
R9233
4.7K
+3.3V
L902
560uH
40V
D901
195637-3
R9235
23.7K
C9211
0.01uF
C9210-NV
0.0015uF
R9238
1.82K
C9212
0.015uF
R9237
16.5K
R9236
7.15k
C9213
100uF
C9219
0.047uF
GND
J10
SEC1
SEC2
C21-NV
0.047uF
C20-NV
0.047uF
D13
D12
C19
0.047uF
C24
0.047uF
C25
0.047uF
C17-NV
0.047uF
D10, D11, D12, D13, D16
256405-200
C23-NV
0.047uF
D10
D11
C22-NV
0.047uF
21V
D16
27V
VSNUB
27.8V
C48
4700uF
6V
6.0V
ZR10
174265-5233
RT6206
RT6307
TEMPSEN2
TEMPSEN1
R10
5.90K
R11
750
R12
12.1K
C16-NV
0.047uF
3V
3.5V
146819
Q11
Q12
3V
3.5V
3V
R13
19.6K
VRAWON
3.2V
Q24
146819
R16
5.90K
20K
R15
C15
0.022uF
Q10
271765-002
21V
14.6V
17.3V
R18
392K
R19
29.4K
C18-NV
0.022uF
C14-NV
0.0056uF
R14
9.09K
Q13-NV
MMBT3904
D15-NV
BAW56
RQ1
1MEG
RQ2
1MEG
RQ3
1MEG
VRAW
14V
C11-NV
1.0uF
C10
15000uF
C9
22000uF
R17-NV
240K
C12-NV
1.0uF
D14-NV
CA BAV99
C13-NV
1.0uF
R25
47K
R26
4.7K
27.8V
27.1V
Q30
287939-001
+10V
U20
173795-1
VIn
VOut
VOut
Adj
NC
VOut
VOut
NC
27.8V
10.4V
9.1V
LM317LM
R22
1.00K
R23
7.15k
C49
2.2uF
VRAW
14V
9.1V
ZR6220
135247-5239
R6221
10.0K
VRAWSEN
3.6V
PG2 C/1
C6220
0.033uF
R6220
29.4K
+5V
C29
0.047uF
C28
2.2uF
U11
258496-01
OUT
IN
ADJ
R20
1.00K
R21
3.09K
+3.3V
L7002
330ohm
VRAWON
3.3V
PG2 C/5
Q31
146817
VSNUB
27.8V
R50
150K
U50
288281-001
R51-NV
10.0K
C56-NV
100pF
C51
0.047uF
C50
22uF
1_KFF
2_RT
3_BP5
4_SYNC
5_SGND
6_SS/SD
7_VFB
8_COMP
ILIM_16
VIN_15
BOOST_14
HDRV_13
SW_12
BP10_11
LDRV_10
PGND_9
PWP
R52
365K
C54
0.1uF
C55
0.0022uF
SOFTSTART
C57
0.1uF
R54
100
1.5V
U51
289259-001
1.2V
L50
22uH
C59
0.1uF
R55
10
9.2V
U51
289259-001
C60
100uF
C64
0.033uF
R59
2.00K
C63
470pf
C62
0.01uF
R56
365
R60
7.87K
R57
11.0K
+1.2V
R7002
0ohm
U7000
TMS320DA705
8_CVDD
16_CVDD
20_CVDD
33_CVDD
44_CVDD
53_CVDD
57_CVDD
65_CVDD
77_CVDD
85_CVDD
90_CVDD
101_CVDD
123_CVDD
128_CVDD
132_CVDD
DVDD_10
DVDD_31
DVDD_42
DVDD_50
DVDD_60
DVDD_68
DVDD_73
DVDD_81
DVDD_92
DVDD_103
DVDD_112
DVDD_125
DVDD_136
1_VSS
6_VSS
13_VSS
15_VSS
18_VSS
26_VSS
30_VSS
36_VSS
40_VSS
47_VSS
54_VSS
62_VSS
69_VSS
72_VSS
78_VSS
82_VSS
87_VSS
95_VSS
99_VSS
106_VSS
109_VSS
114_VSS
118_VSS
124_VSS
129_VSS
133_VSS
140_VSS
145_VSS
C7001
.033uF
C7002
.033uF
C7003
.033uF
C7004
.033uF
C7005
.033uF
C7006
.033uF
SI ZE B
FSCM 32108
CLASS SD
DWG NO. 290178
REV 00
SCALE N/A
CAT. CODE *
SHEET 4 OF 4