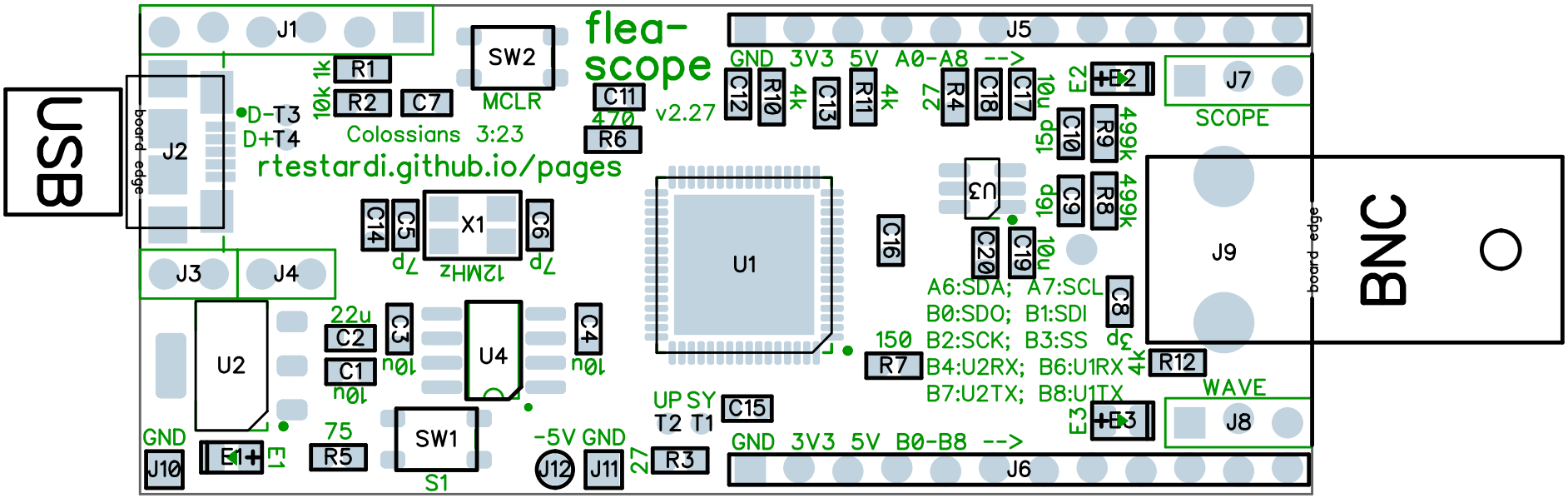
USB
BNC
flea-
scope
v2.27
rtestardi.github.io/pages
Colossians 3:23
MCLR
SCOPE
WAVE
D-T3
D+T4
GND 3V3 5V A0-A8 -->
GND 3V3 5V B0-B8 -->
A6:SDA; A7:SCL
B0:SDO; B1:SDI
B2:SCK; B3:SS
B4:U2RX; B6:U1RX
B7:U2TX; B8:U1TX
UP SY
T2 T1
-5V GND
board edge
J1
J2
J3
J4
J5
J6
J7
J8
J9
J10
J11
J12
U1
U2
U4
X1
SW1
SW2
S1
R1
R2
R3
R4
R5
R6
R7
R8
R9
R10
R11
R12
C1
C2
C3
C4
C5
C6
C7
C8
C9
C10
C11
C12
C13
C14
C15
C16
C17
C18
C19
C20
E1
E2
E3
12MHz