ITEM NO.	PART NUMBER	QTY.
1	X End Motor	1
2	LM8UU_24mm	2
3	GT2 16 teeth	1
4	NEMA17 Stepper Motor	1
5	M3 Pan Head x 10mm	4
6	M8 Hex Nut	1

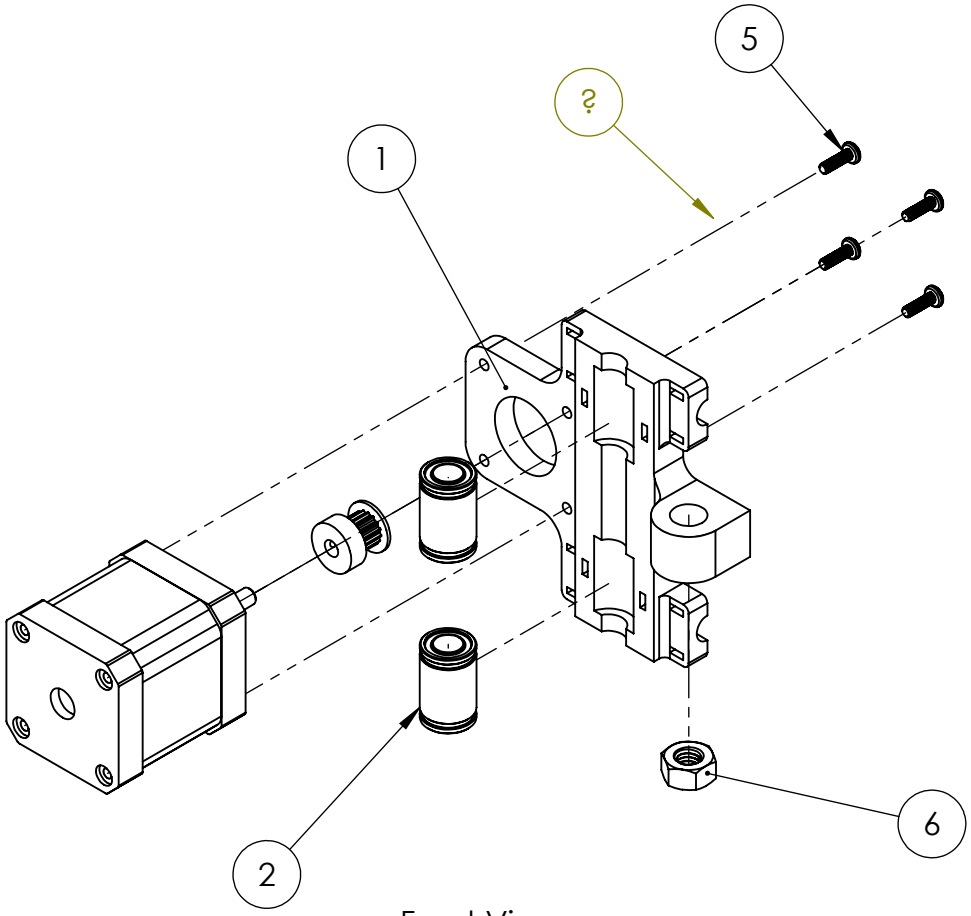

Front View

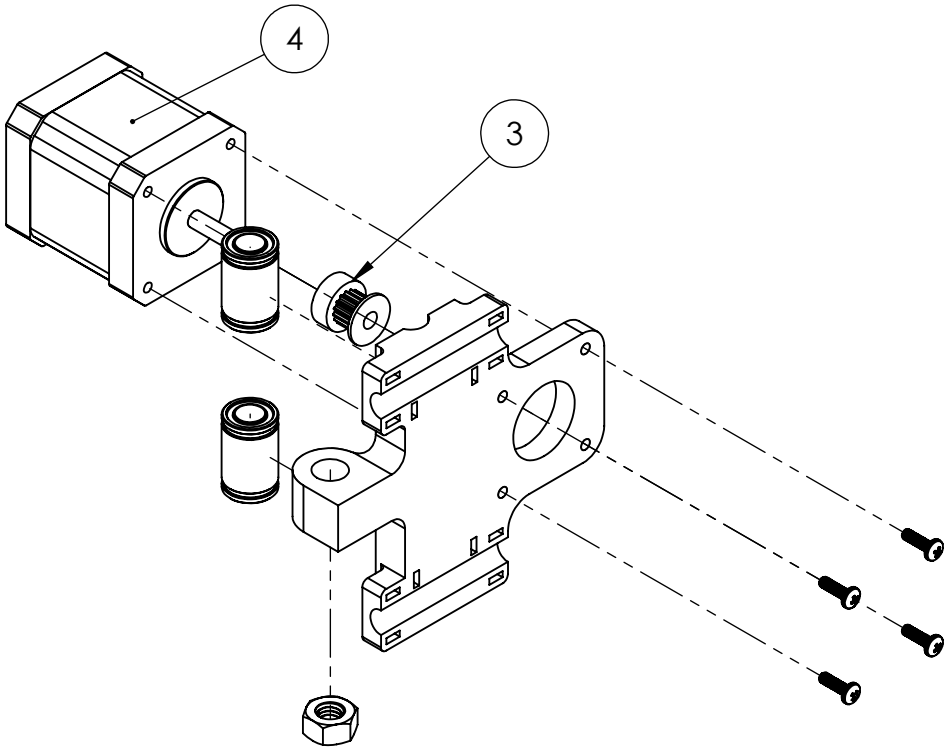

Back View

COMMENTS:	SIZE	TITLE:	REV
	A	X_Motor_SubAssy	
	SCALE: 1:2		SHEET 1 OF 1

5 4 3 2 1