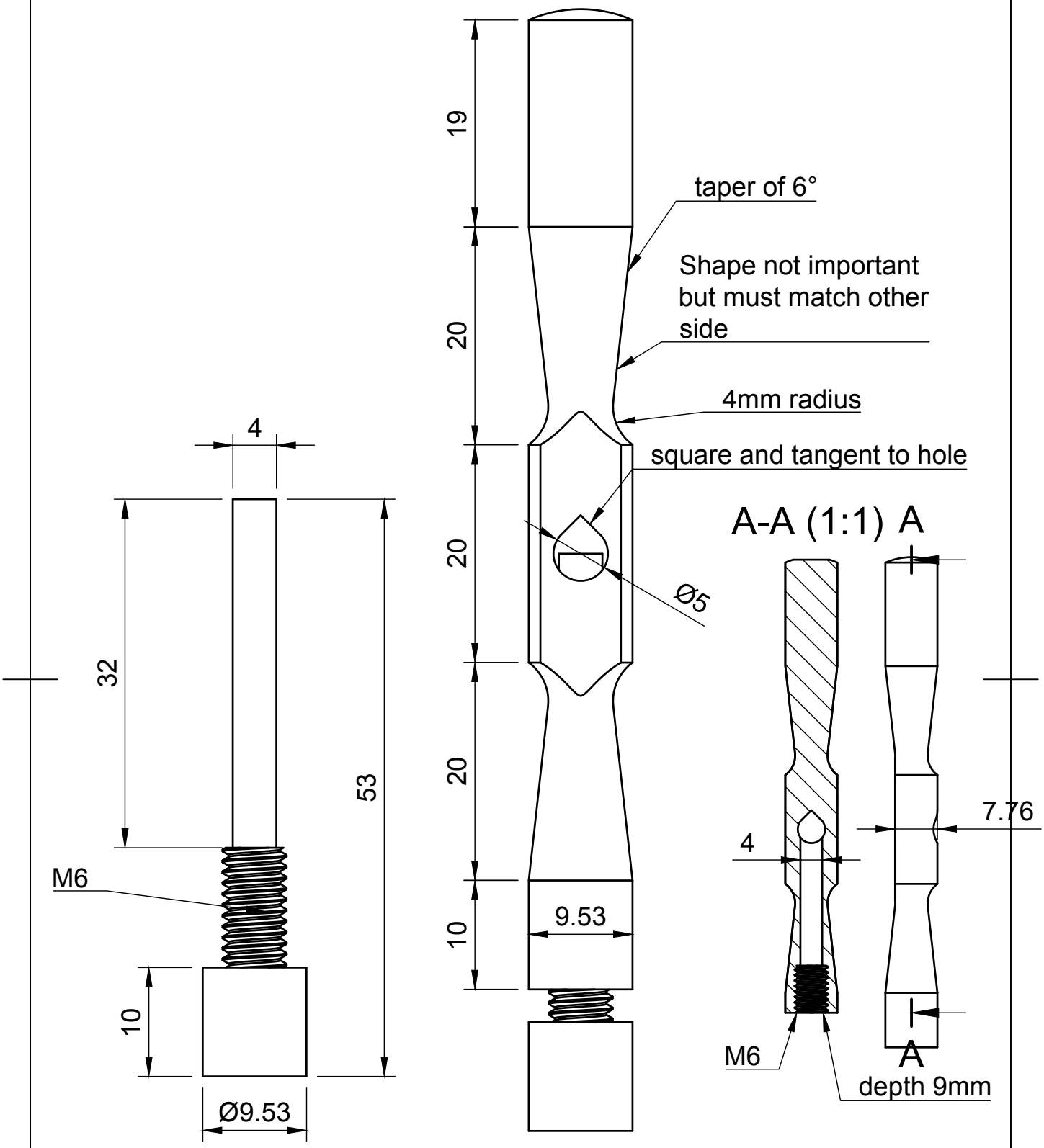

Dept.	Technical reference	Created by Milo Coombs 09/07/2020	Approved by	
Creative commons atribution 4.0 international		Document type	Document status	
		Title Tap Wrench	DWG No.	
			Rev. / Date of issue	Sheet 1/1