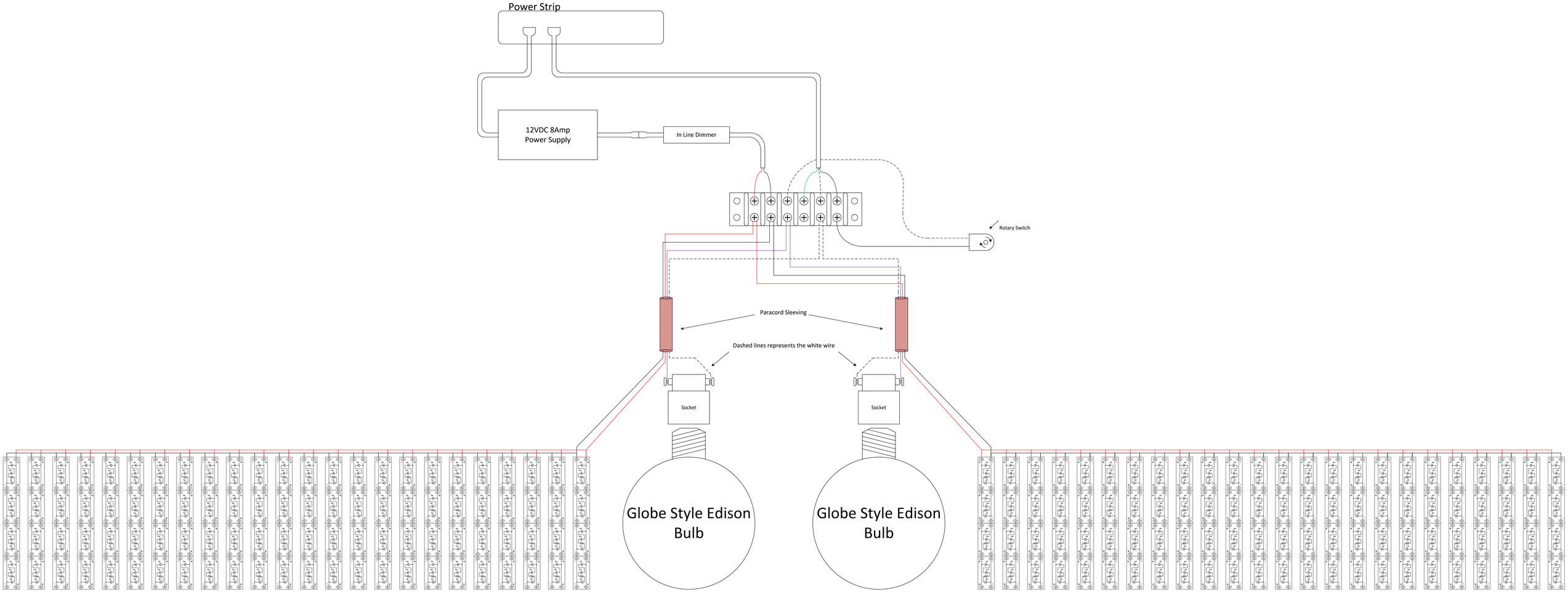Standing Desk Pulley Lamp
John Culbertson
2016-10-11