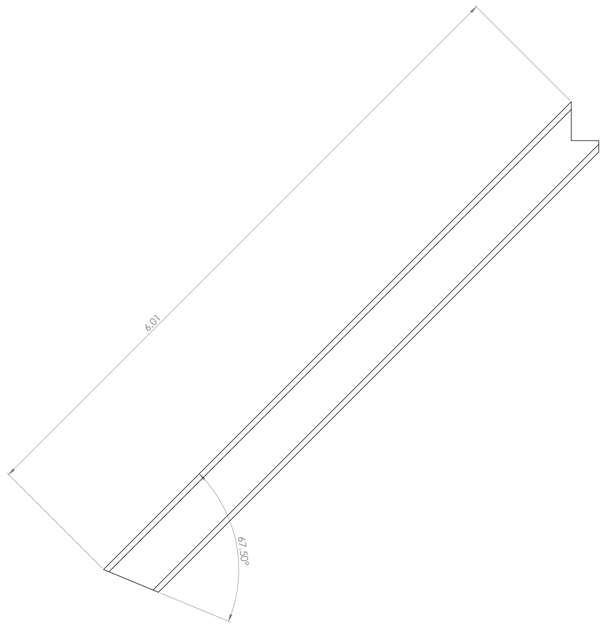

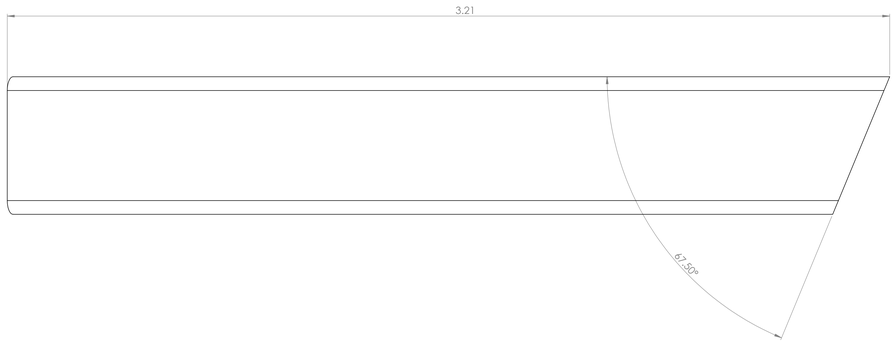

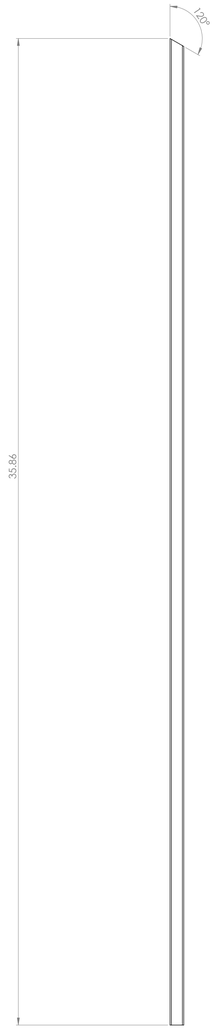

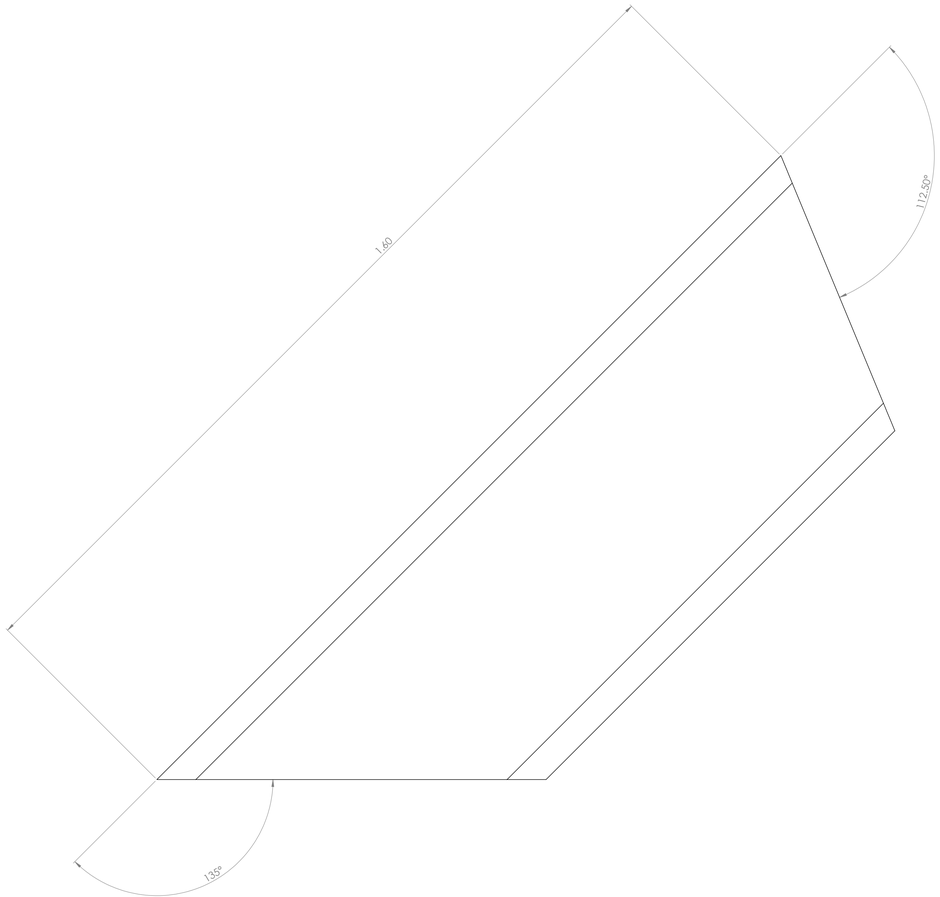

UNLESS OTHERWISE SPECIFIED: DIMENSIONS ARE IN MILLIMETERS SURFACE FINISH: TOLERANCES: LINEAR ANGULAR:	FINISH:		DEBURR AND BREAK SHARP EDGES	DO NOT SCALE DRAWING	REVISION
	NAME	SIGNATURE	DATE	TITLE:	
DRAWN					
CHK'D					
APPV'D					
MFG					
Q.A.				MATERIAL:	DWG NO. stand-Structural Member-1 A0
				WEIGHT:	SCALE:2:1 SHEET 1 OF 1

SOLIDWORKS Student Edition.
For Academic Use Only.