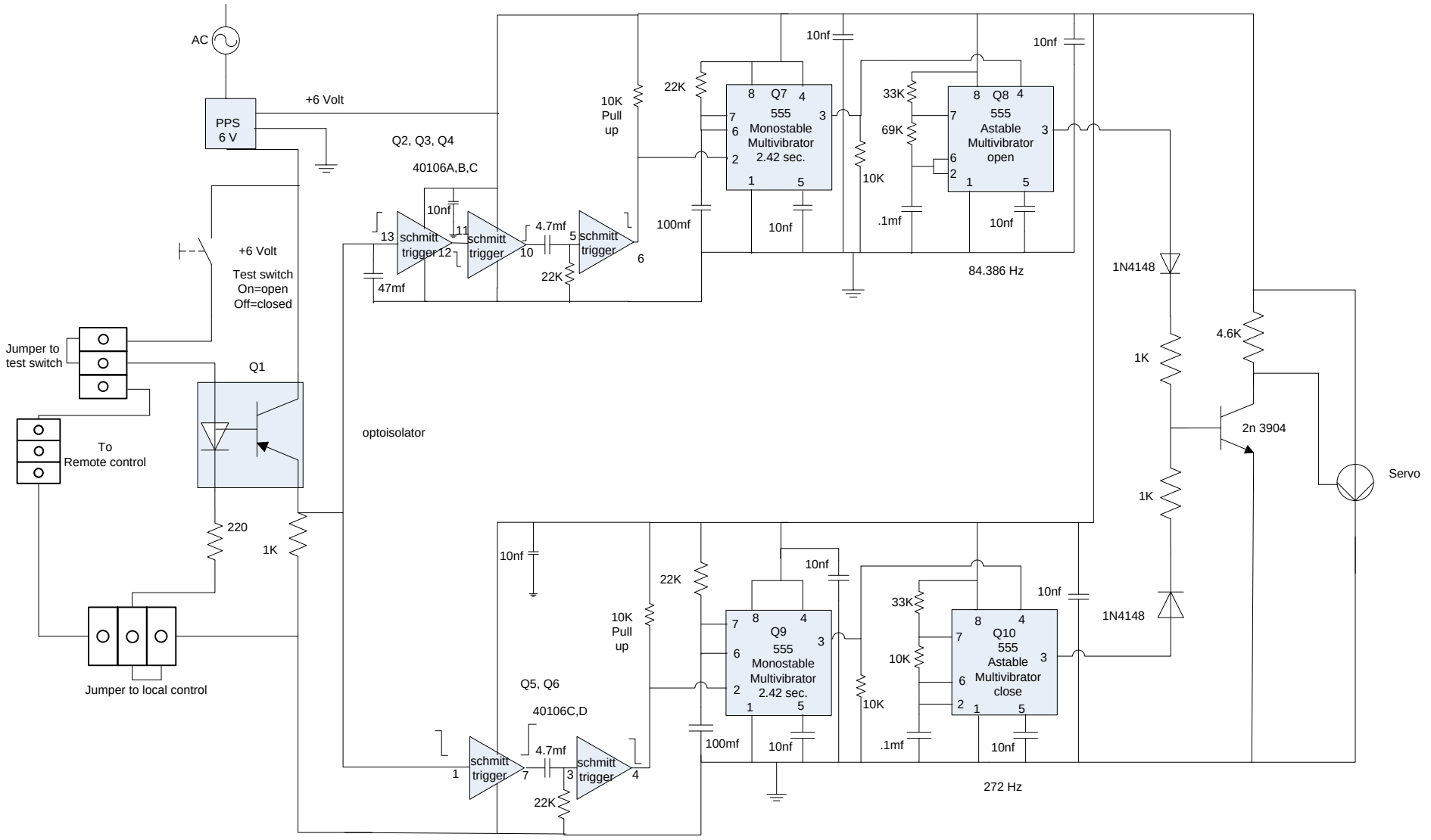

AUTOMATIC SERVO CONTROLLER

By Dennis Atwood

6/25/2018