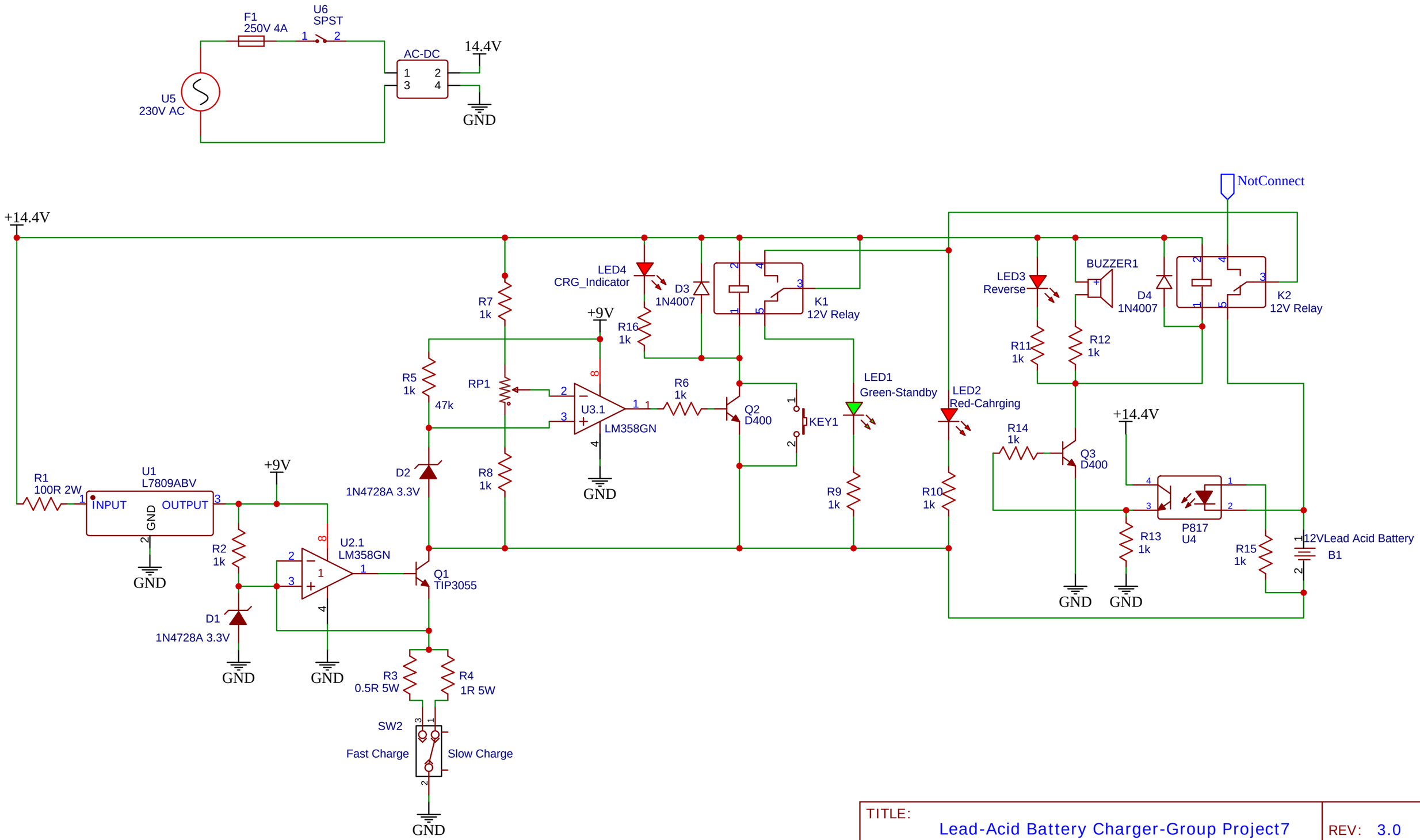

TITLE: Lead-Acid Battery Charger-Group Project7		REV: 3.0
	Company:	Sheet: 1/1
	Date: 2024-11-17 Drawn By:	

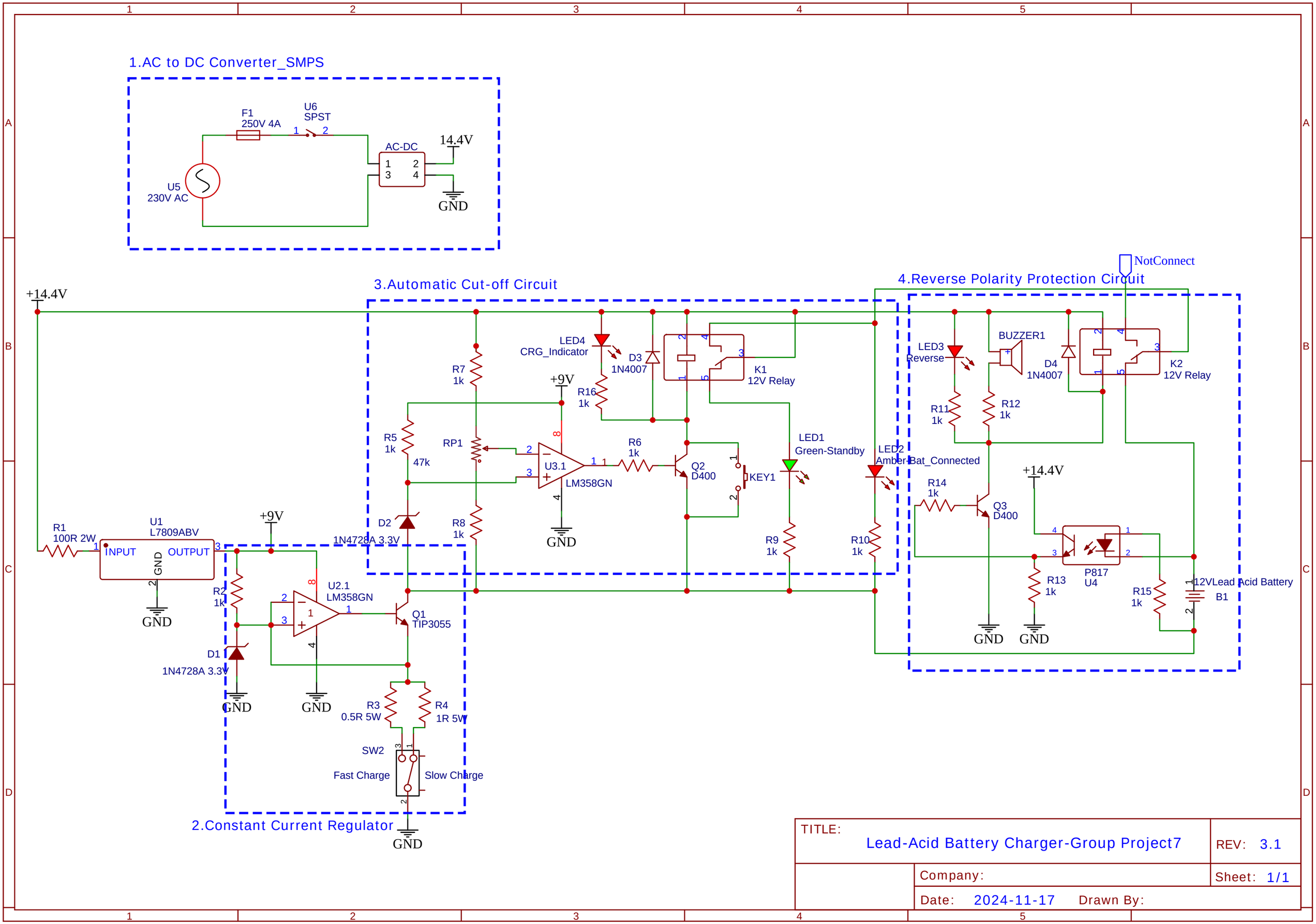
1.AC to DC Converter_SMPS
F1
250V 4A
U6
SPST
AC-DC
14.4V
U5
230V AC
GND
+14.4V
3.Automatic Cut-off Circuit
4.Reverse Polarity Protection Circuit
NotConnect
LED4
CRG_Indicator
D3
1N4007
K1
12V Relay
R7
1k
+9V
R16
1k
R5
1k
47k
RP1
U3.1
LM358GN
R6
1k
Q2
D400
KEY1
LED1
Green-Standby
LED2
Amber-Bat_Connected
R8
1k
R9
1k
R10
1k
D2
1N4728A 3.3V
LED3
Reverse
BUZZER1
D4
1N4007
K2
12V Relay
R11
1k
R12
1k
R14
1k
Q3
D400
P817
U4
R13
1k
R15
1k
12VLead Acid Battery
B1
R1
100R 2W
U1
L7809ABV
INPUT
OUTPUT
GND
R2
1k
U2.1
LM358GN
Q1
TIP3055
D1
1N4728A 3.3V
R3
0.5R 5W
R4
1R 5W
SW2
Fast Charge
Slow Charge
2.Constant Current Regulator
TITLE:
Lead-Acid Battery Charger-Group Project7
REV: 3.1
Company:
Sheet: 1/1
Date: 2024-11-17
Drawn By: