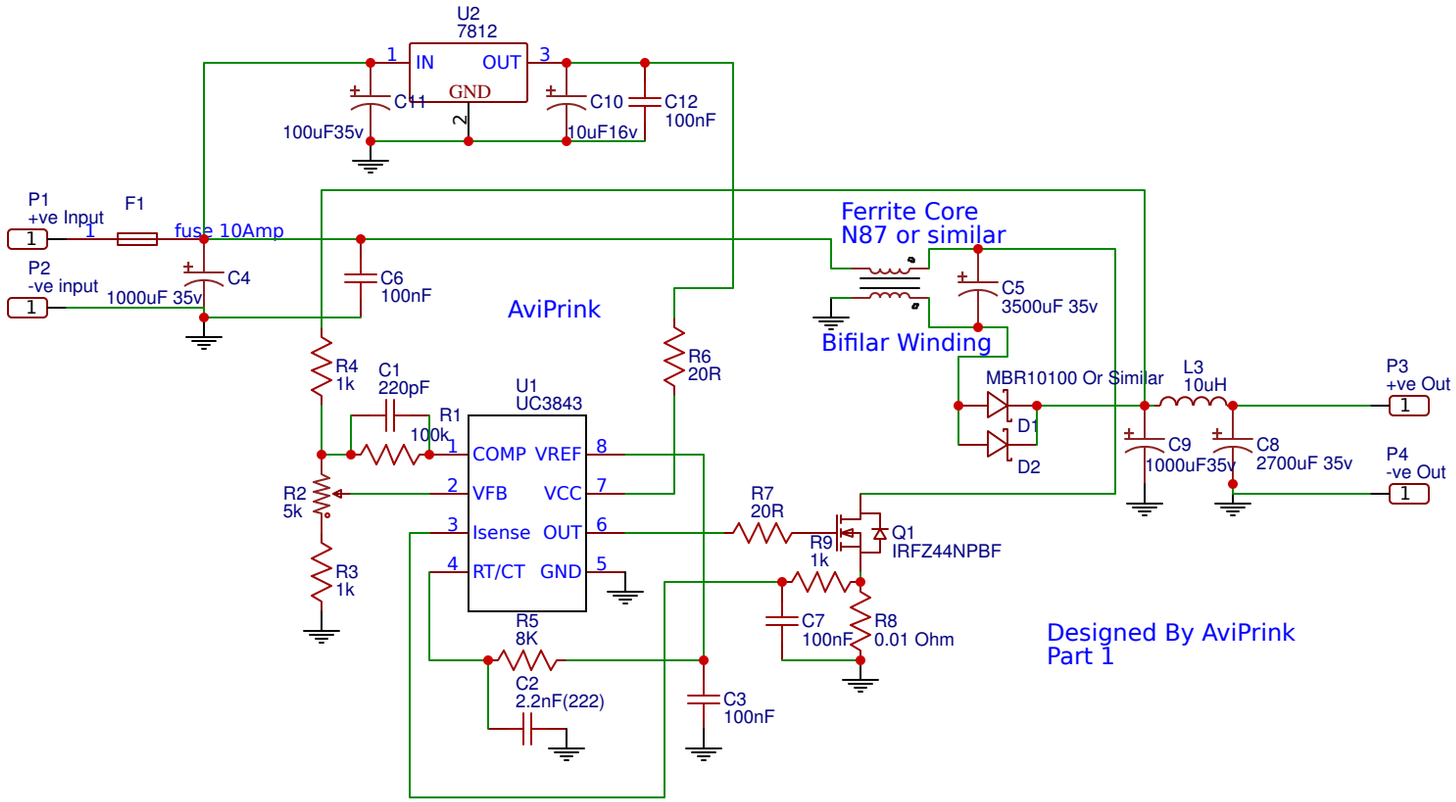

TITLE: New Schematic	REV: 1.0
Date: 2018-07-15	Sheet: 1/1
EasyEDA V5.5.15	Drawn By: avinashsingh1992