ELECTRONIC BUSINESS CARD

MCU ATMEGA328P

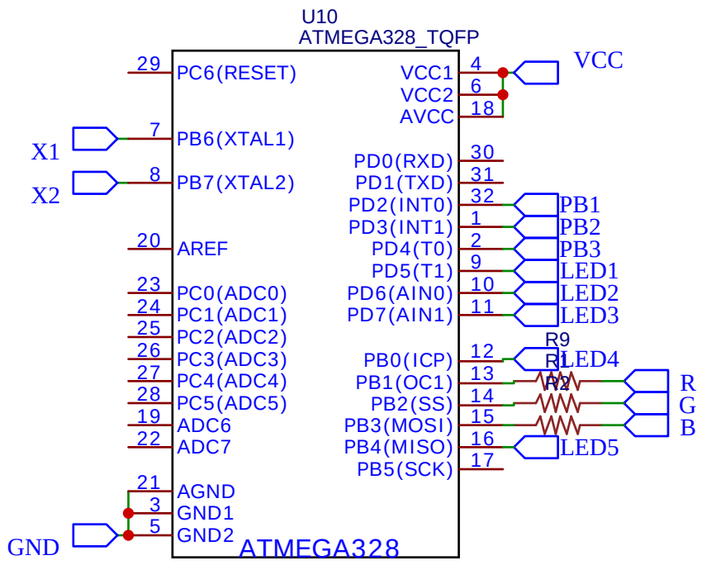

LEDs & BUTTONS

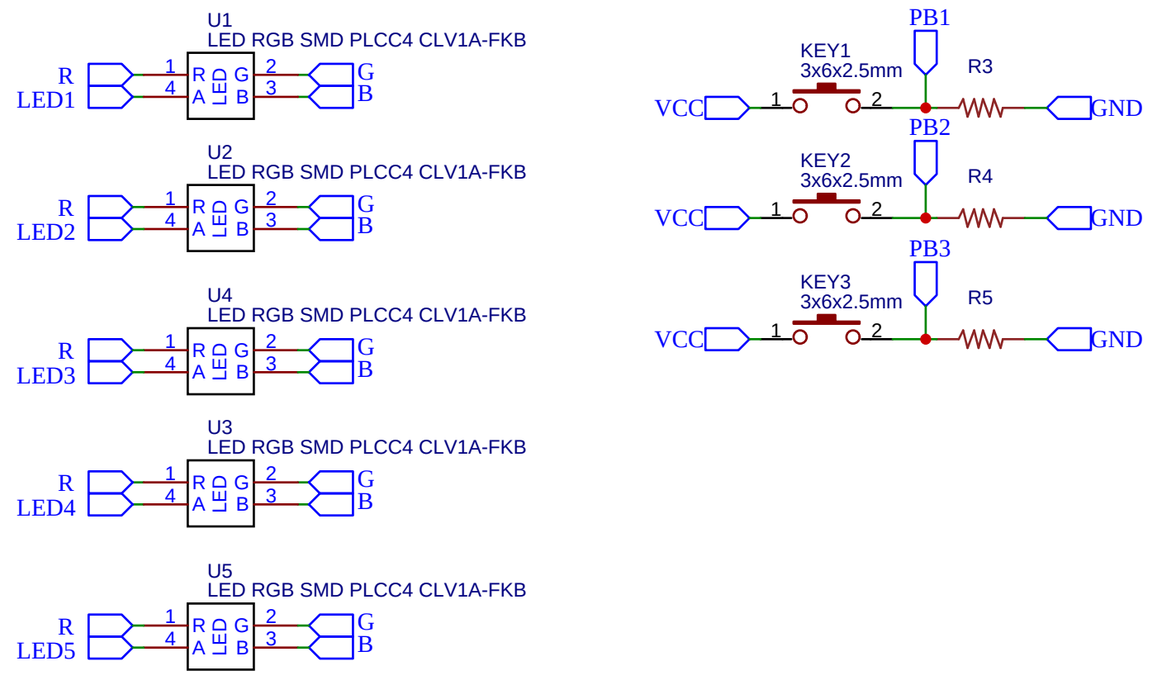

POWER & OSCILLATOR

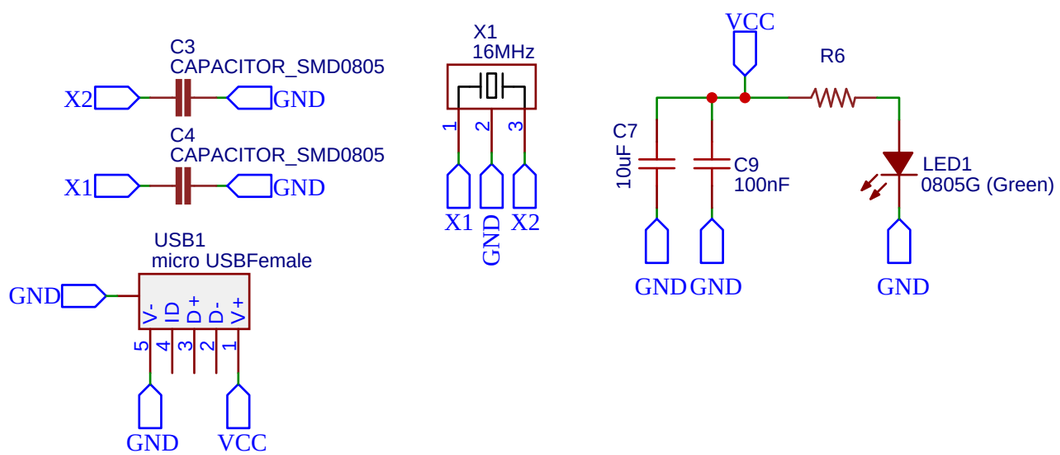

TITLE: Electronic Business Card	REV: 1.0
Company: MEGA DAS	Sheet: 1/1
Date: 2020-04-23 Drawn By: BEE_MB	