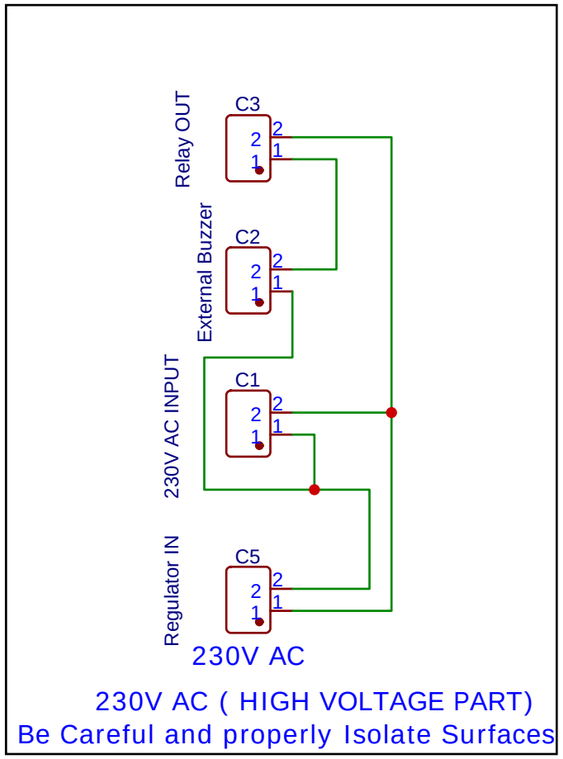

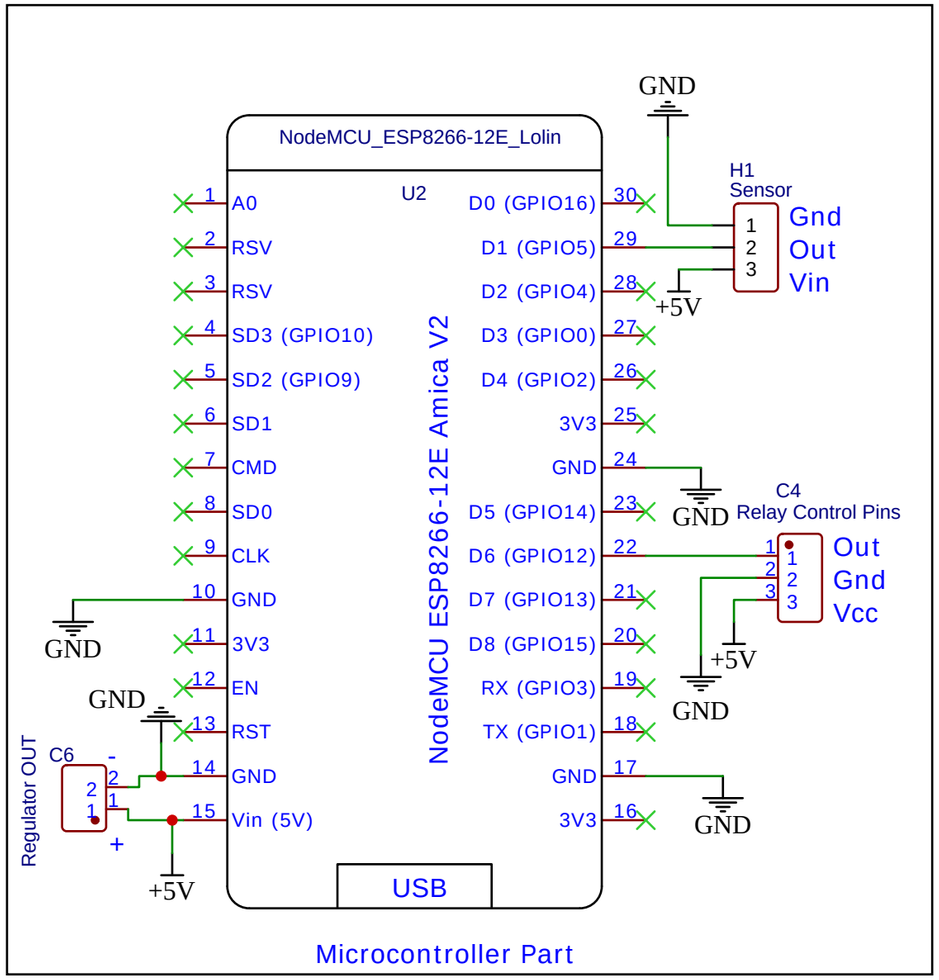

TITLE: IOT based Alarm System		REV: 1.0
EasyEDA	Company: Mission Critical	Sheet: 1/1
	Date: 2020-07-29 Drawn By: Akshay Momaya	