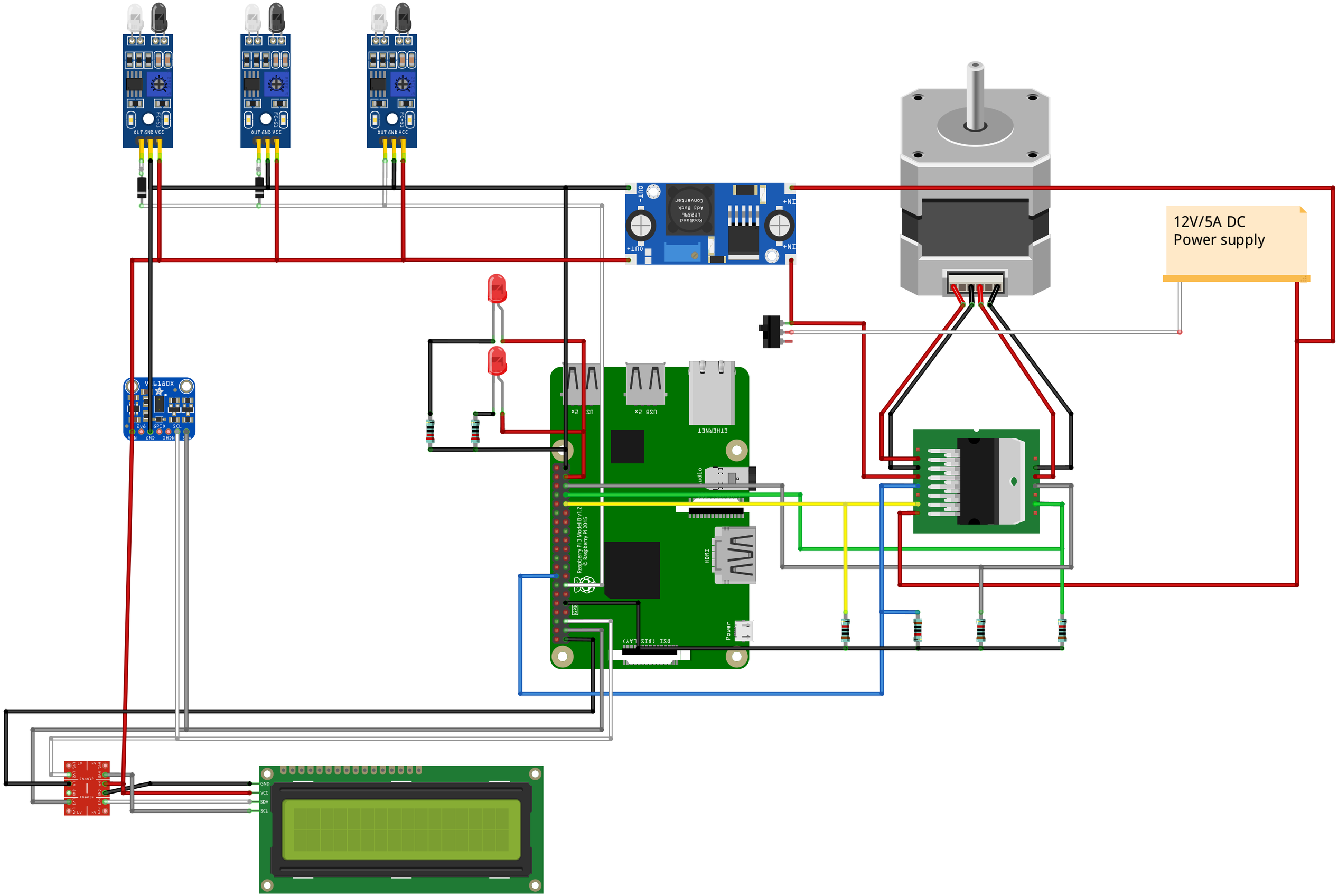
12V/5A DC
Power supply
OUT GND VCC
GND
VCC
SDA
SCL
Raspberry Pi 3 Model B v1.2
© Raspberry Pi 2015
HDMI
Power
ETHERNET
USB 2x
fritzing