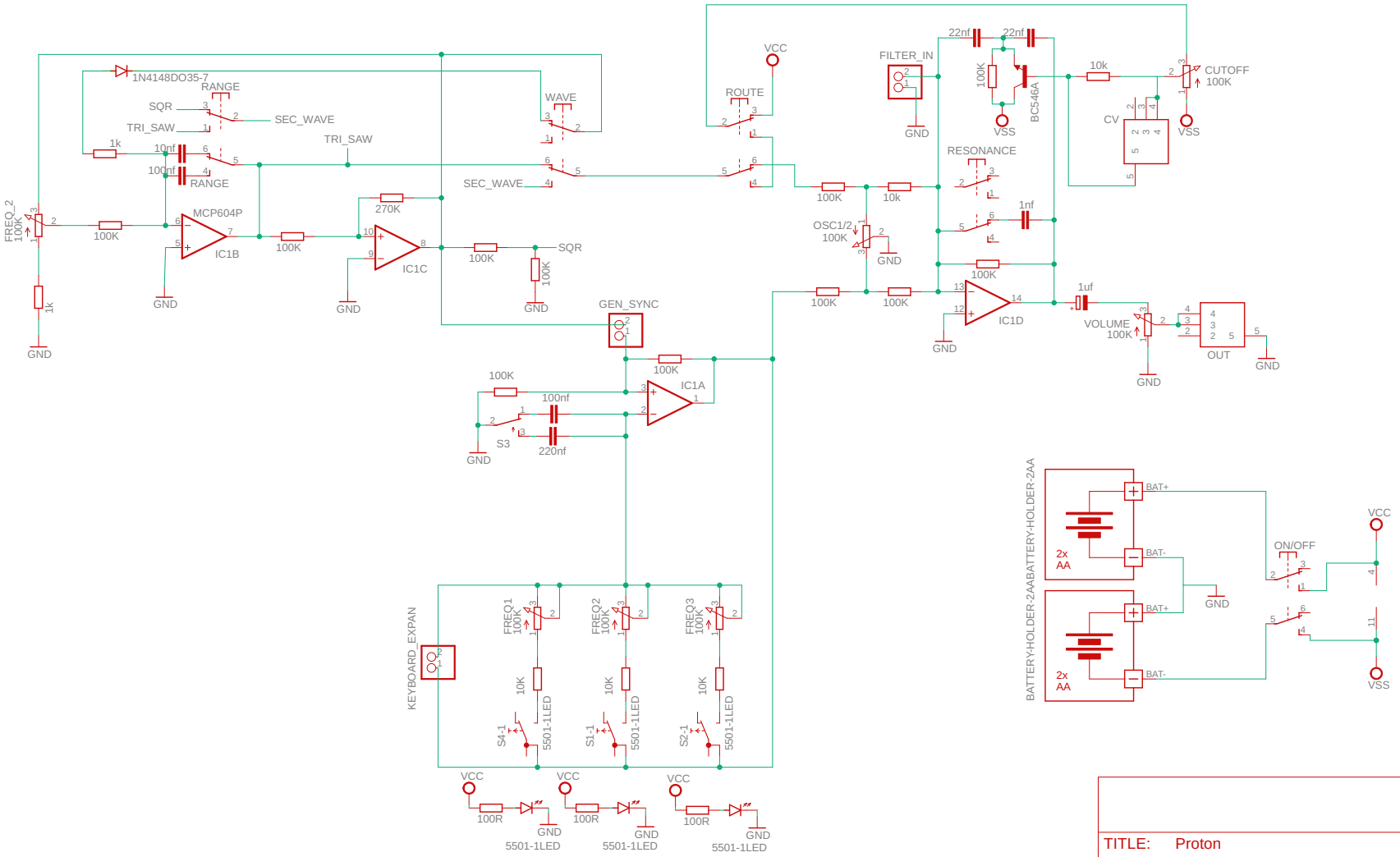

TITLE: Proton	
Document Number:	REV:
Date: 30/09/2023 11:02 AM	Sheet: 1/1