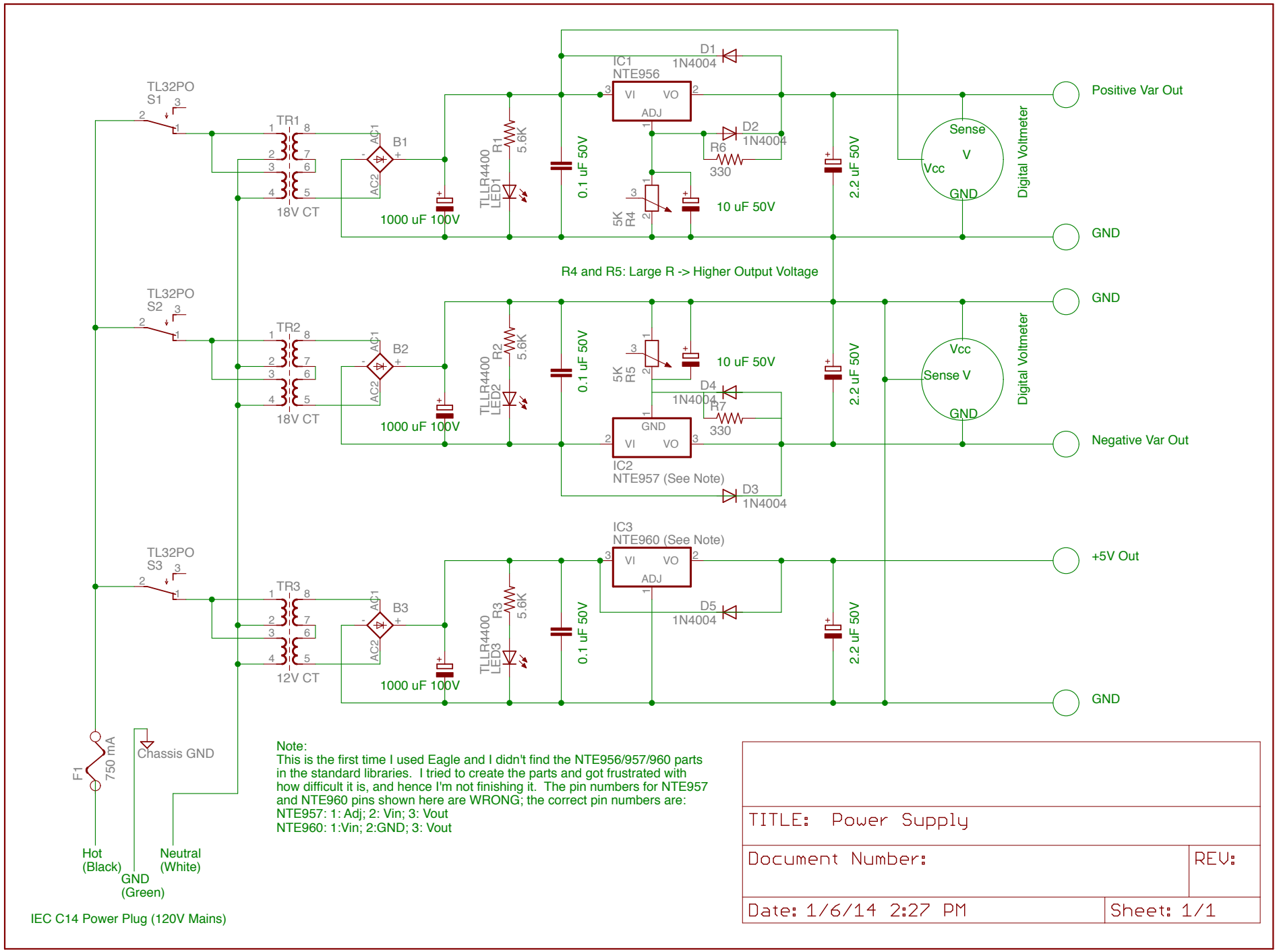
TL32PO
S1
TR1
18V CT
B1
1000 uF 100V
TLLR4400
LED1
R1
5.6K
0.1 uF 50V
IC1
NTE956
VI
VO
ADJ
D1
1N4004
D2
1N4004
R6
330
5K
R4
10 uF 50V
2.2 uF 50V
Sense
V
Vcc
GND
Digital Voltmeter
Positive Var Out
GND
R4 and R5: Large R -> Higher Output Voltage
TL32PO
S2
TR2
18V CT
B2
1000 uF 100V
TLLR4400
LED2
R2
5.6K
0.1 uF 50V
5K
R5
10 uF 50V
D4
1N4004
R7
330
IC2
NTE957 (See Note)
D3
1N4004
2.2 uF 50V
Vcc
Sense V
GND
Digital Voltmeter
GND
Negative Var Out
TL32PO
S3
TR3
12V CT
B3
1000 uF 100V
TLLR4400
LED3
R3
5.6K
0.1 uF 50V
IC3
NTE960 (See Note)
VI
VO
ADJ
D5
1N4004
2.2 uF 50V
+5V Out
GND
F1
750 mA
Chassis GND
Hot
(Black)
GND
(Green)
Neutral
(White)
IEC C14 Power Plug (120V Mains)
Note:
This is the first time I used Eagle and I didn't find the NTE956/957/960 parts in the standard libraries. I tried to create the parts and got frustrated with how difficult it is, and hence I'm not finishing it. The pin numbers for NTE957 and NTE960 pins shown here are WRONG; the correct pin numbers are:
NTE957: 1: Adj; 2: Vin; 3: Vout
NTE960: 1:Vin; 2:GND; 3: Vout
TITLE: Power Supply
Document Number:
REV:
Date: 1/6/14 2:27 PM
Sheet: 1/1