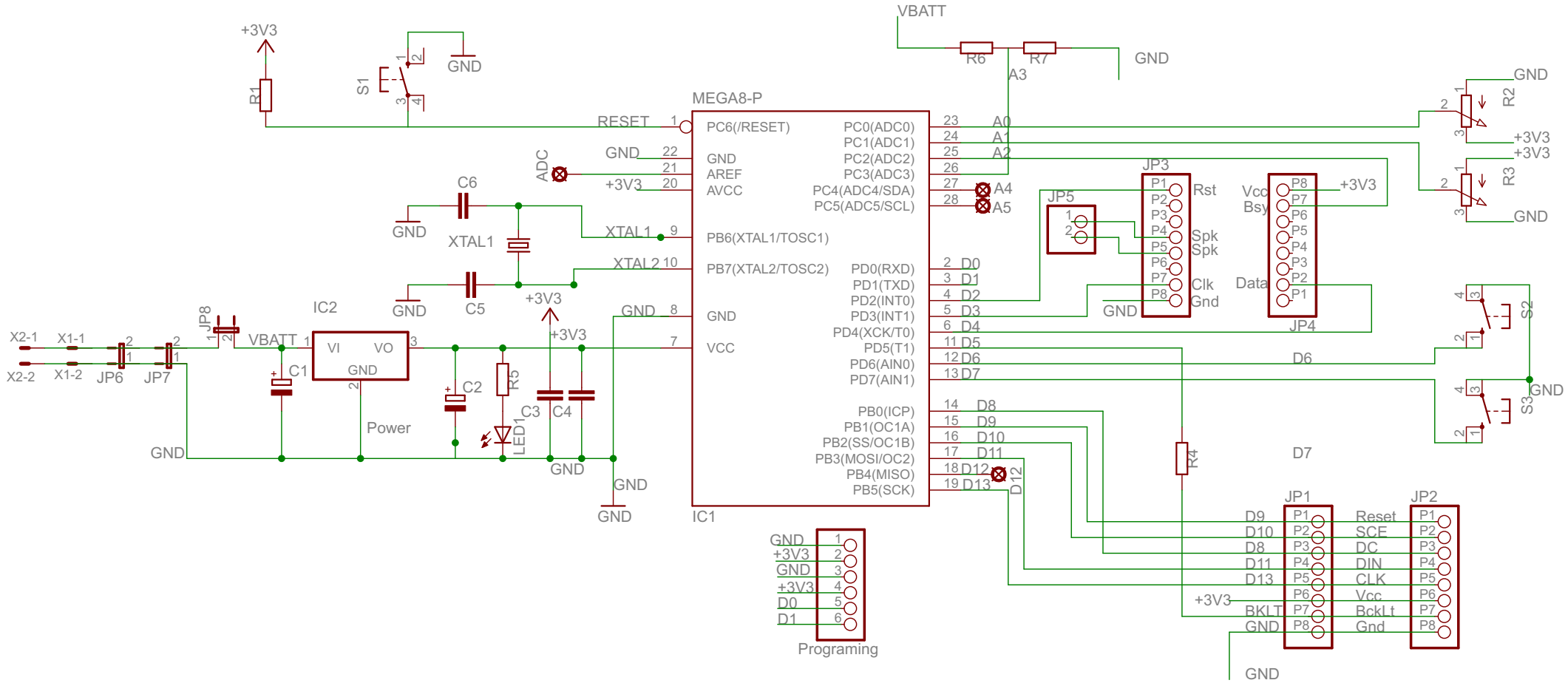
MEGA8-P
IC1
RESET
PC6(/RESET)
GND
AREF
AVCC
PB6(XTAL1/TOSC1)
PB7(XTAL2/TOSC2)
VCC
PC0(ADC0)
PC1(ADC1)
PC2(ADC2)
PC3(ADC3)
PC4(ADC4/SDA)
PC5(ADC5/SCL)
PD0(RXD)
PD1(TXD)
PD2(INT0)
PD3(INT1)
PD4(XCK/T0)
PD5(T1)
PD6(AIN0)
PD7(AIN1)
PB0(ICP)
PB1(OC1A)
PB2(SS/OC1B)
PB3(MOSI/OC2)
PB4(MISO)
PB5(SCK)
+3V3
R1
S1
GND
VBATT
R6
R7
A3
ADC
C6
C5
XTAL1
XTAL2
IC2
VI
VO
C1
C2
R5
LED1
C3
C4
Power
JP8
X2-1
X1-1
X2-2
X1-2
JP6
JP7
JP3
JP5
JP4
Rst
Spk
Clk
Gnd
Vcc
Bsy
Data
A0
A1
A2
A4
A5
D0
D1
D2
D3
D4
D5
D6
D7
D8
D9
D10
D11
D12
D13
R4
R2
R3
S2
S3
JP1
JP2
Reset
SCE
DC
DIN
CLK
Vcc
BckLt
Gnd
BKLT
Programing