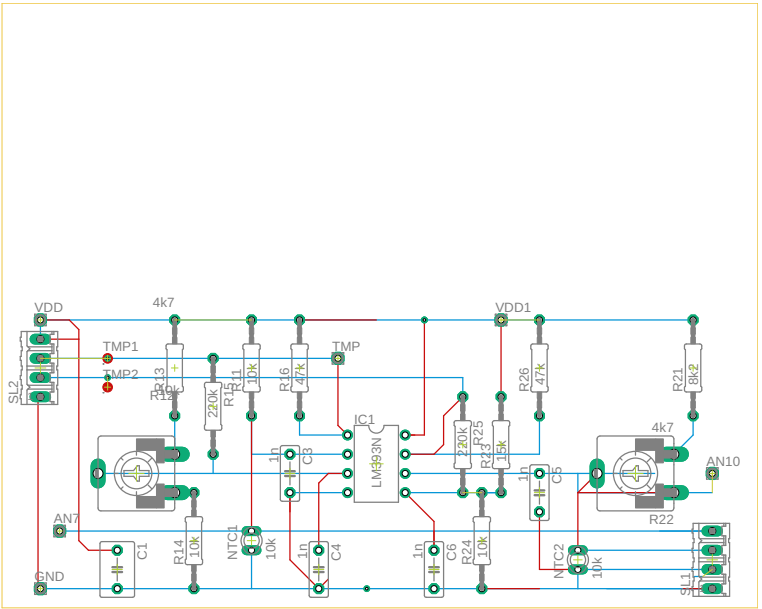
VDD
4k7
TMP1
TMP2
SL2
R13
10k
R12
220k
R15
R11
10k
R16
47k
TMP
IC1
LM393N
1n
C3
R14
10k
NTC1
10k
1n
C4
AN7
C1
GND
R25
220k
R23
15k
1n
C5
R24
10k
1n
C6
VDD1
R26
47k
R21
8k2
4k7
AN10
R22
NTC2
10k
SL1