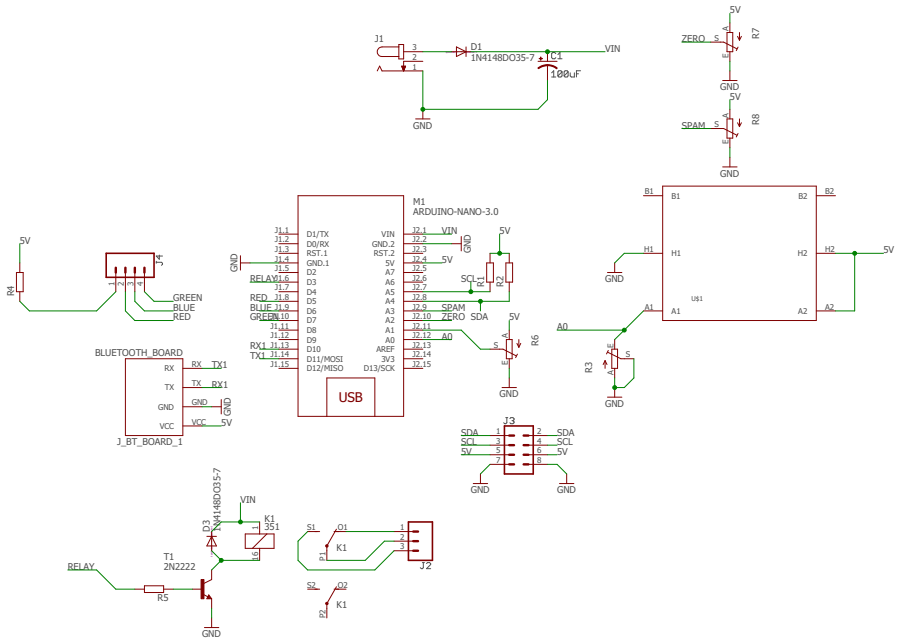
J1
D1
1N4148DO35-7
C1
100uF
VIN
GND
5V
ZERO
R7
SPAM
R8
M1
ARDUINO-NANO-3.0
USB
J4
GREEN
BLUE
RED
R4
BLUETOOTH_BOARD
J_BT_BOARD_1
RX1
TX1
RELAY
SCL
SDA
R1
R2
R6
A0
R3
U$1
J3
D3
1N4148DO35-7
K1
351
T1
2N2222
R5
S1
S2
O1
O2
K1
J2