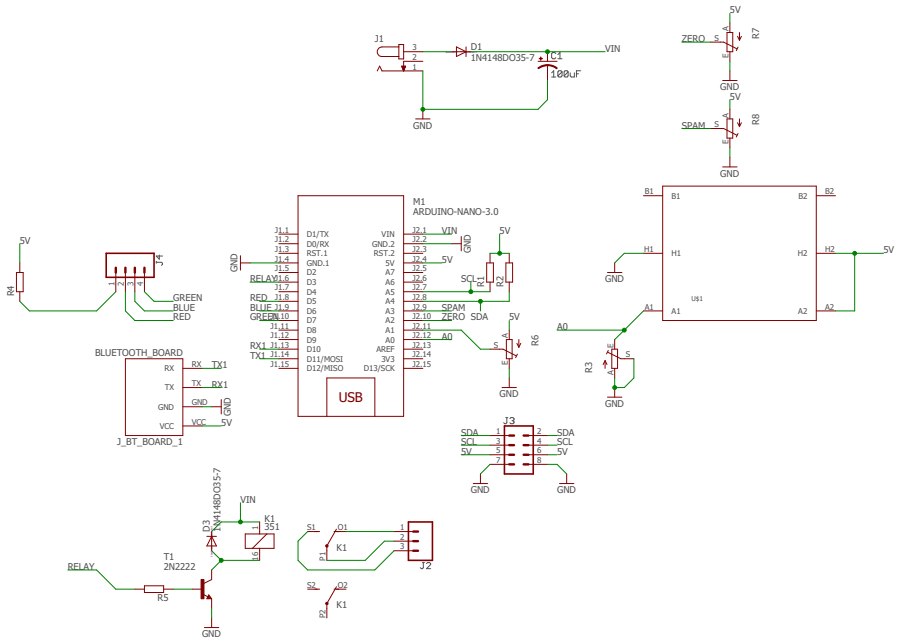

12/12/2017 9:10 PM f=0.50 C:\Users\Erika\Documents\eagle\NH3 Sense\NH#SENSOR.sch (Sheet: 1/1)