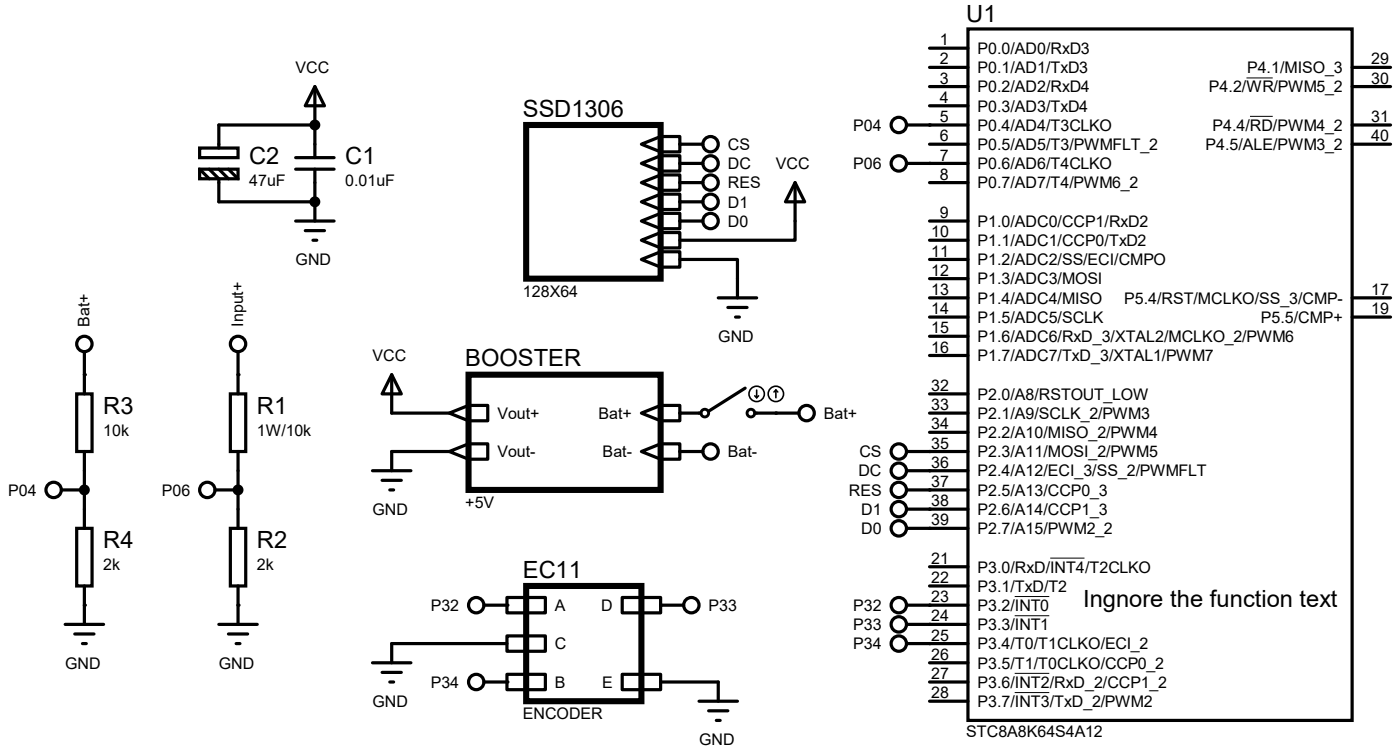
U1
VCC
C2
47uF
C1
0.01uF
GND
SSD1306
CS
DC
RES
D1
D0
VCC
128X64
GND
Bat+
R3
10k
P04
R4
2k
GND
Input+
R1
1W/10k
P06
R2
2k
GND
VCC
BOOSTER
Vout+
Vout-
Bat+
Bat-
Bat+
Bat-
GND
+5V
EC11
P32
A
D
P33
C
P34
B
E
GND
ENCODER
GND
1 P0.0/AD0/RxD3
2 P0.1/AD1/TxD3
3 P0.2/AD2/RxD4
4 P0.3/AD3/TxD4
5 P0.4/AD4/T3CLKO
6 P0.5/AD5/T3/PWMFLT_2
7 P0.6/AD6/T4CLKO
8 P0.7/AD7/T4/PWM6_2
9 P1.0/ADC0/CCP1/RxD2
10 P1.1/ADC1/CCP0/TxD2
11 P1.2/ADC2/SS/ECI/CMPO
12 P1.3/ADC3/MOSI
13 P1.4/ADC4/MISO
14 P1.5/ADC5/SCLK
15 P1.6/ADC6/RxD_3/XTAL2/MCLKO_2/PWM6
16 P1.7/ADC7/TxD_3/XTAL1/PWM7
32 P2.0/A8/RSTOUT_LOW
33 P2.1/A9/SCLK_2/PWM3
34 P2.2/A10/MISO_2/PWM4
35 P2.3/A11/MOSI_2/PWM5
36 P2.4/A12/ECI_3/SS_2/PWMFLT
37 P2.5/A13/CCP0_3
38 P2.6/A14/CCP1_3
39 P2.7/A15/PWM2_2
21 P3.0/RxD/INT4/T2CLKO
22 P3.1/TxD/T2
23 P3.2/INT0
24 P3.3/INT1
25 P3.4/T0/T1CLKO/ECI_2
26 P3.5/T1/T0CLKO/CCP0_2
27 P3.6/INT2/RxD_2/CCP1_2
28 P3.7/INT3/TxD_2/PWM2
P4.1/MISO_3 29
P4.2/WR/PWM5_2 30
P4.4/RD/PWM4_2 31
P4.5/ALE/PWM3_2 40
P5.4/RST/MCLKO/SS_3/CMP- 17
P5.5/CMP+ 19
P04
P06
CS
DC
RES
D1
D0
P32
P33
P34
Ingnore the function text
STC8A8K64S4A12