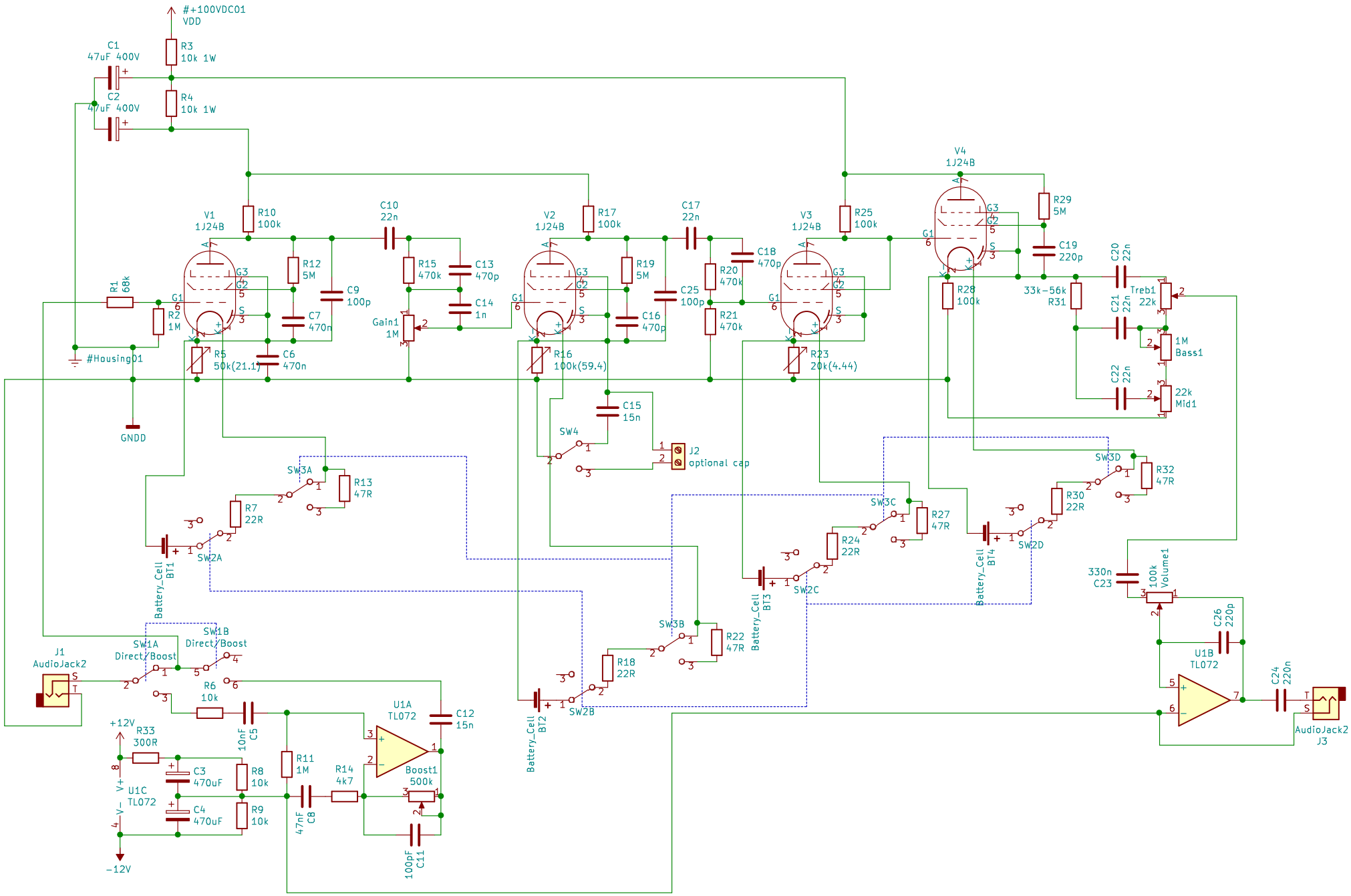
#+100VDC01
VDD
C1
47uF 400V
C2
47uF 400V
R3
10k 1W
R4
10k 1W
V1
1J24B
V2
1J24B
V3
1J24B
V4
1J24B
R10
100k
R17
100k
R25
100k
R29
5M
C10
22n
C17
22n
R12
5M
R15
470k
C13
470p
R19
5M
C18
470p
R20
470k
C19
220p
C20
22n
R1
68k
R2
1M
C9
100p
C7
470n
C14
1n
C25
100p
C16
470p
R21
470k
R28
100k
33k-56k
R31
C21
22n
Treb1
22k
1M
Bass1
C22
22n
22k
Mid1
Gain1
1M
R5
50k(21.1)
C6
470n
R16
100k(59.4)
R23
20k(4.44)
#Housing01
GNDD
C15
15n
SW4
J2
optional cap
SW3A
R13
47R
R7
22R
SW2A
Battery_Cell
BT1
SW3D
R32
47R
R30
22R
SW2D
Battery_Cell
BT4
SW3C
R27
47R
R24
22R
SW2C
Battery_Cell
BT3
SW3B
R22
47R
R18
22R
SW2B
Battery_Cell
BT2
330n
C23
100k
Volume1
C26
220p
U1B
TL072
C24
220n
AudioJack2
J3
J1
AudioJack2
SW1A
Direct/Boost
SW1B
Direct/Boost
R6
10k
10nF
C5
U1A
TL072
C12
15n
+12V
R33
300R
C3
470uF
C4
470uF
R8
10k
R9
10k
U1C
TL072
-12V
R11
1M
47nF
C8
R14
4k7
Boost1
500k
100pF
C11