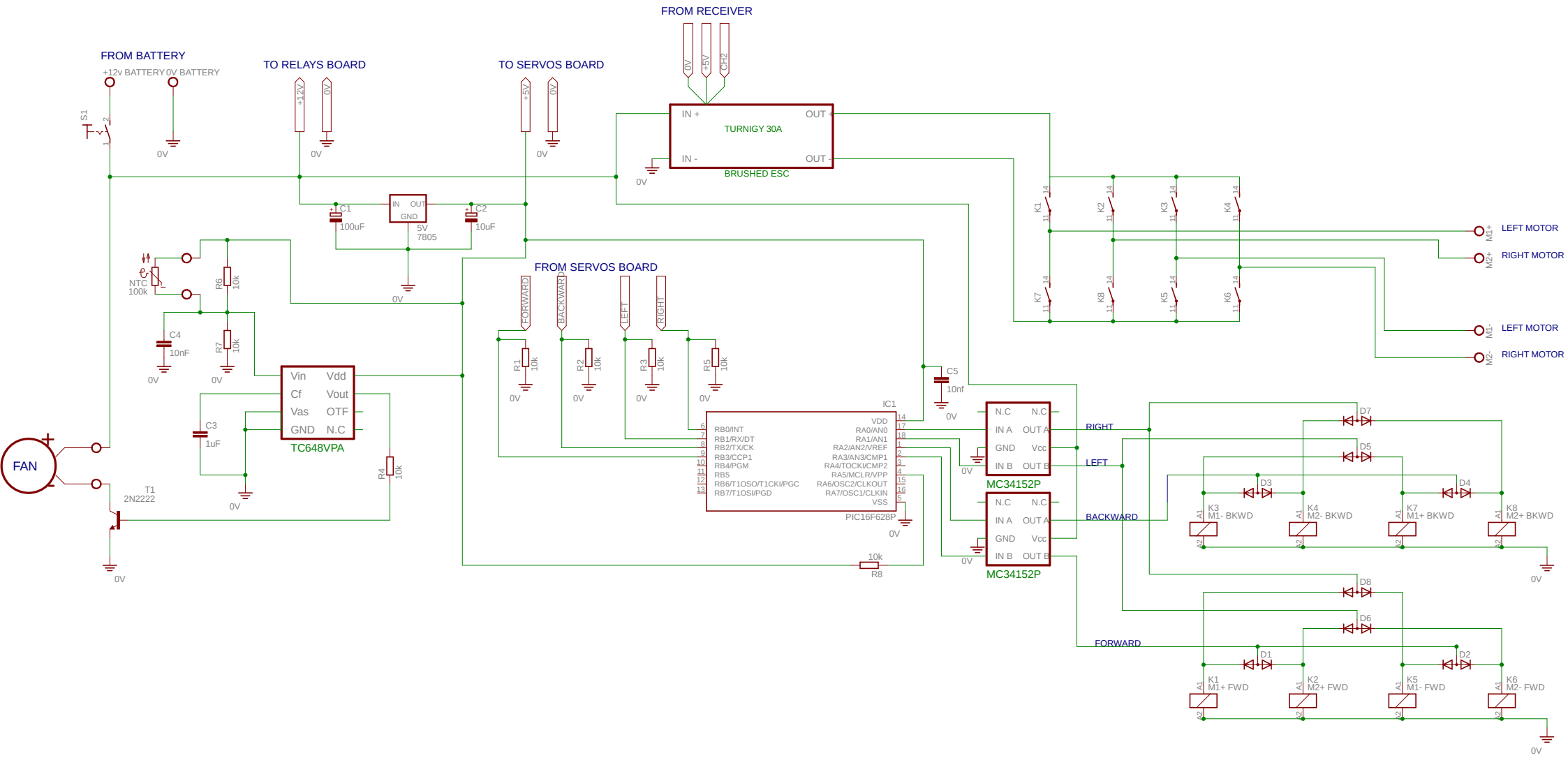

22.06.2012 21:12:36 f=0.67 D:\Electronique\Drawings - schémas\MAIN BOARD.sch (Sheet: 1/1)