LM358
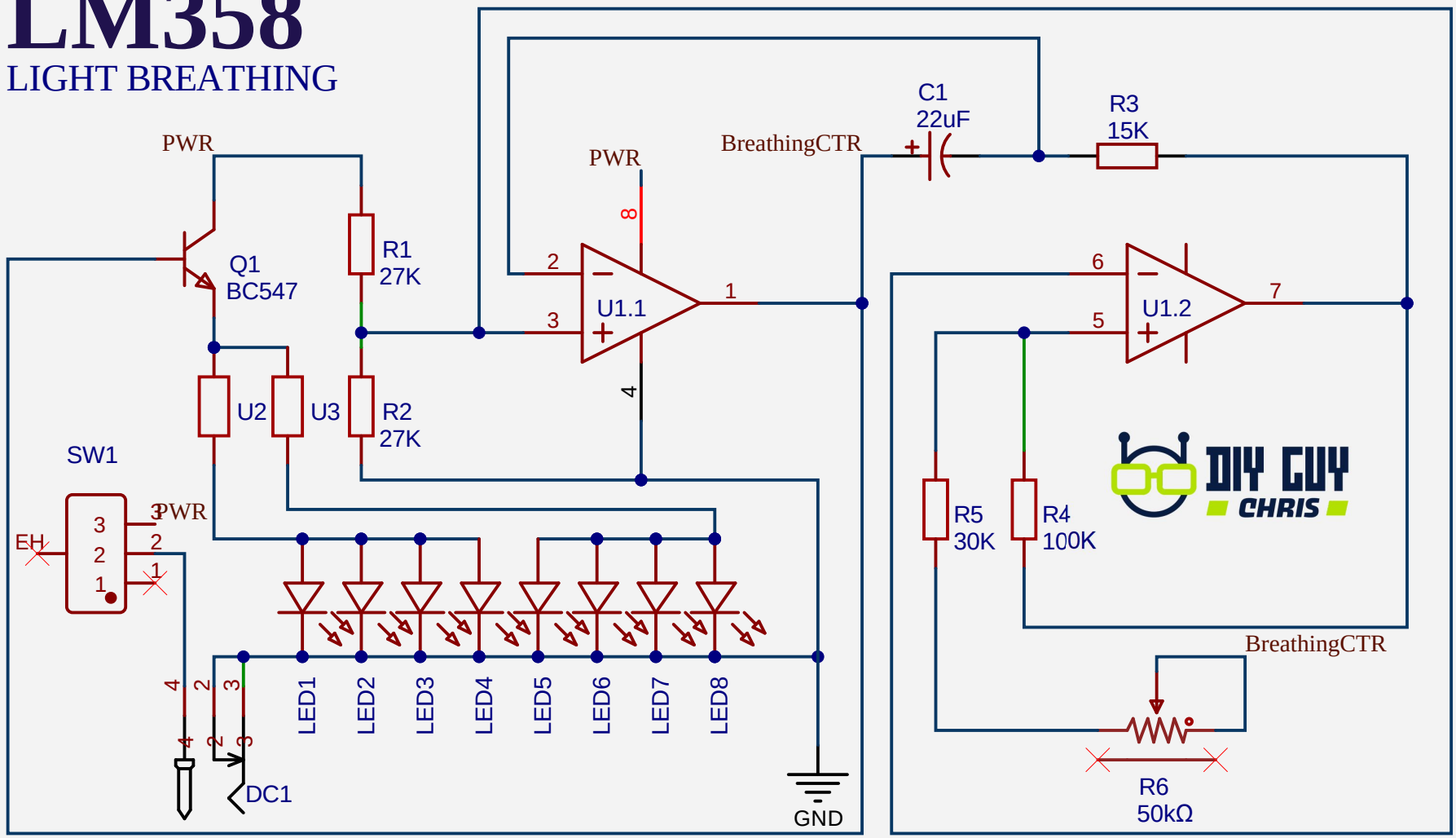
LIGHT BREATHING