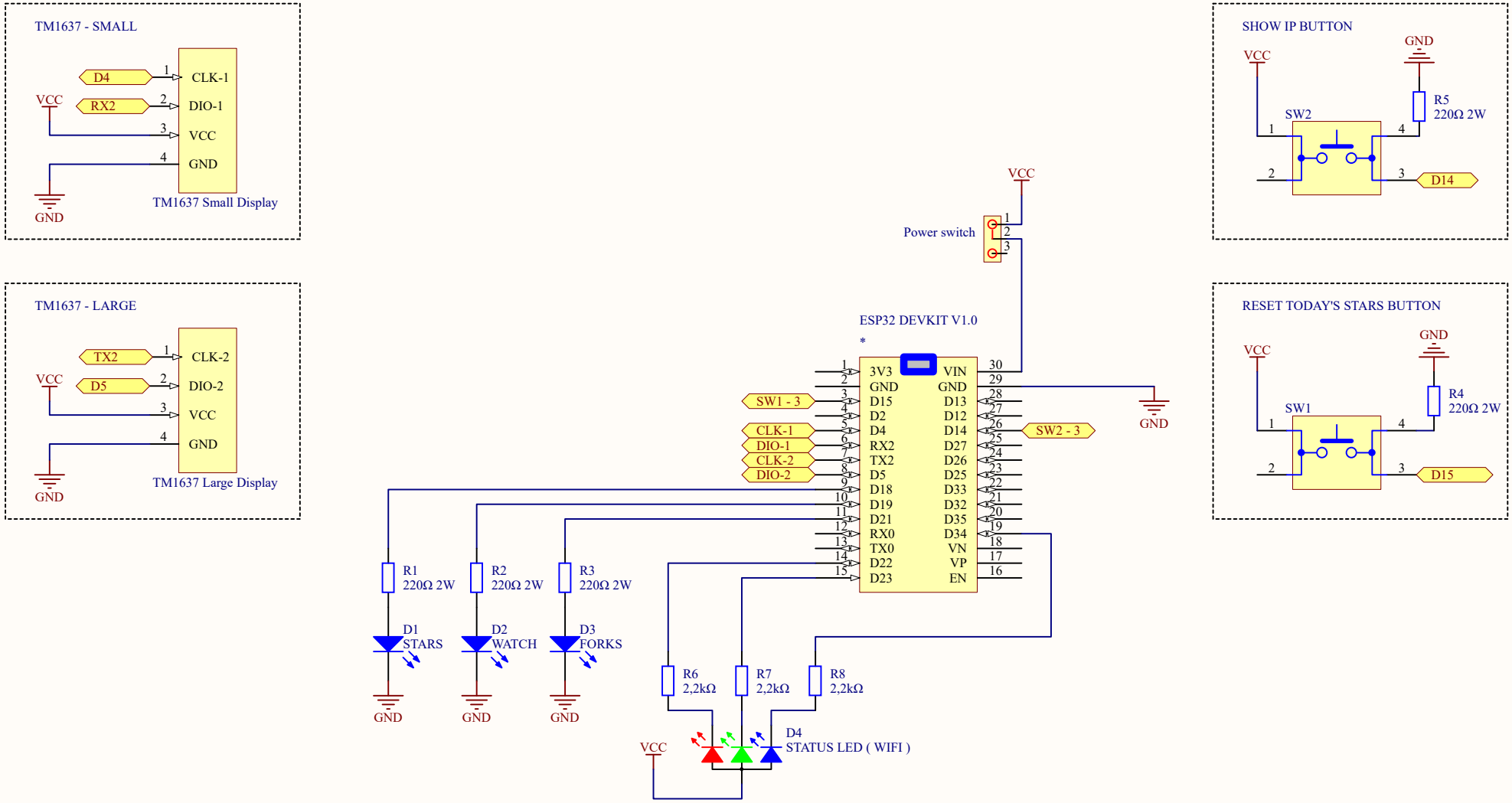

Title	IoT GitHub Frame	
Size A4	Number	Revision
Date: 17.03.2019		Sheet of
File: GitHub frame schematic.SchDoc		Drawn By: Paweł Skórka