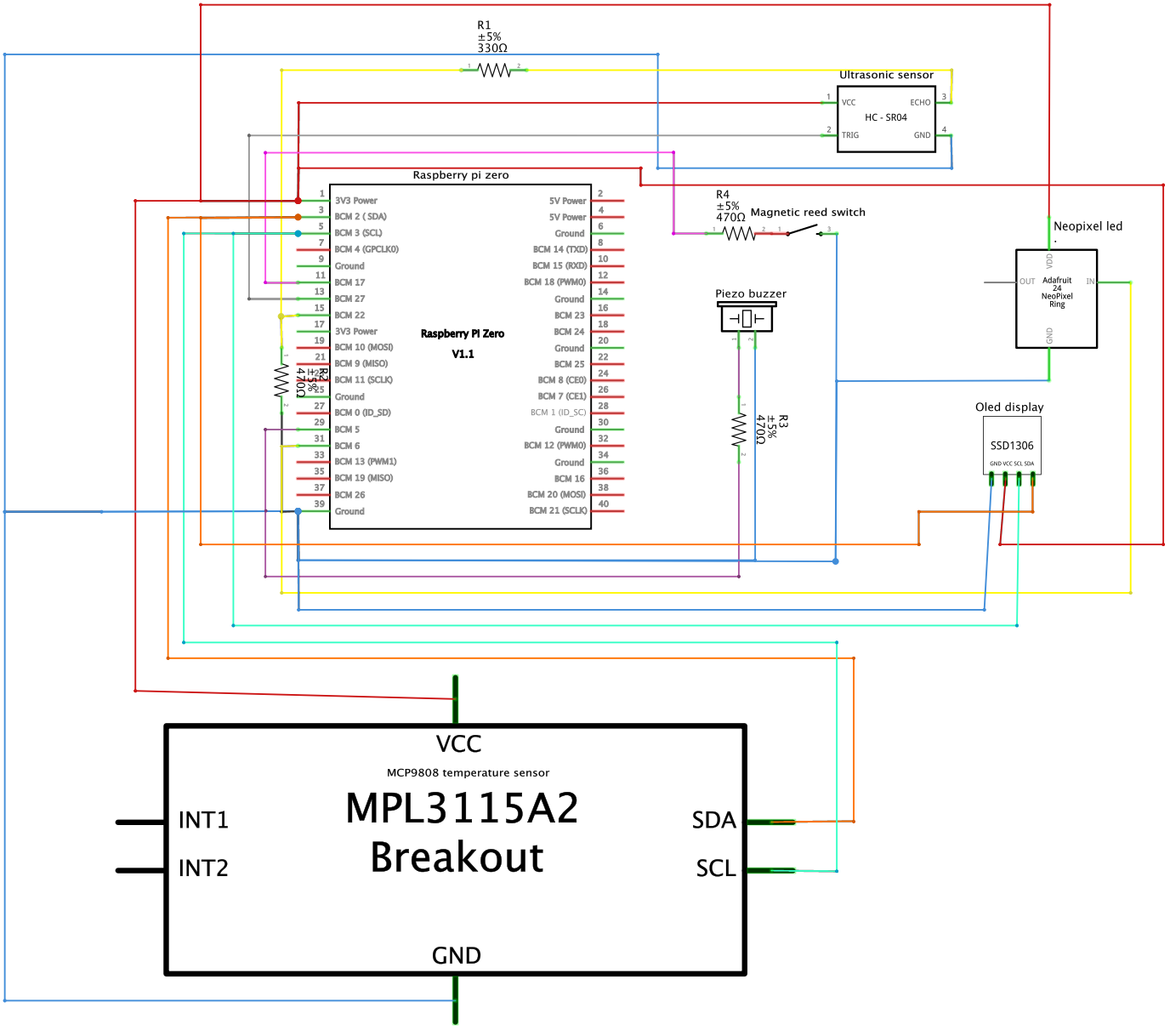
R1
±5%
330Ω
Ultrasonic sensor
VCC
ECHO
HC - SR04
TRIG
GND
Raspberry pi zero
3V3 Power
BCM 2 (SDA)
BCM 3 (SCL)
BCM 4 (GPCLK0)
Ground
BCM 17
BCM 27
BCM 22
3V3 Power
BCM 10 (MOSI)
BCM 9 (MISO)
BCM 11 (SCLK)
Ground
BCM 0 (ID_SD)
BCM 5
BCM 6
BCM 13 (PWM1)
BCM 19 (MISO)
BCM 26
Ground
Raspberry Pi Zero
V1.1
5V Power
5V Power
Ground
BCM 14 (TXD)
BCM 15 (RXD)
BCM 18 (PWM0)
Ground
BCM 23
BCM 24
Ground
BCM 25
BCM 8 (CE0)
BCM 7 (CE1)
BCM 1 (ID_SC)
Ground
BCM 12 (PWM0)
Ground
BCM 16
BCM 20 (MOSI)
BCM 21 (SCLK)
R2
±5%
470Ω
R4
±5%
470Ω
Magnetic reed switch
Neopixel led
VDD
OUT
Adafruit 24 NeoPixel Ring
IN
GND
Piezo buzzer
R3
±5%
470Ω
Oled display
SSD1306
GND VCC SCL SDA
VCC
MCP9808 temperature sensor
MPL3115A2
Breakout
INT1
INT2
SDA
SCL
GND

fritzing