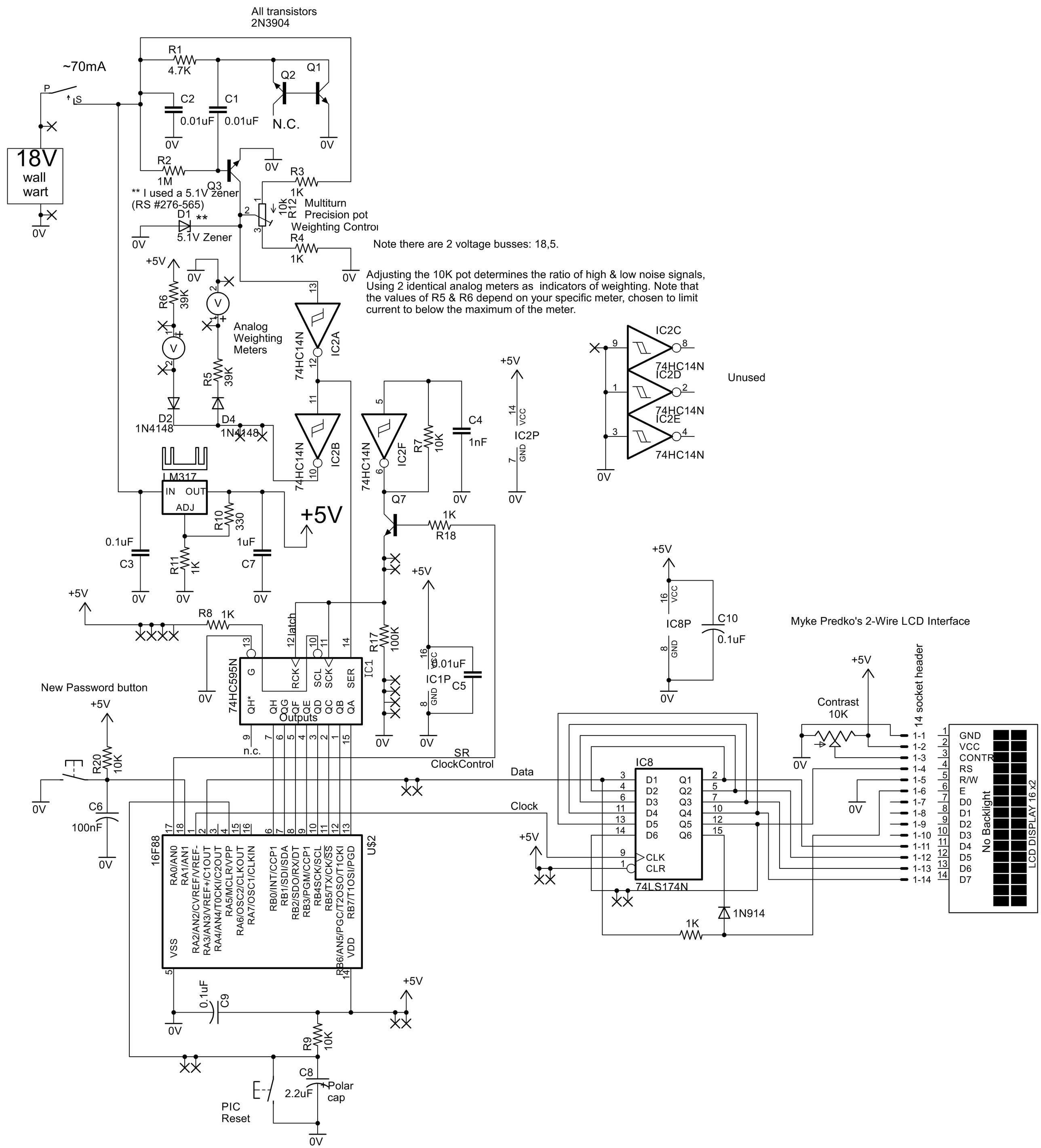Password Generator - PIC captures noise and displays 16 byte password