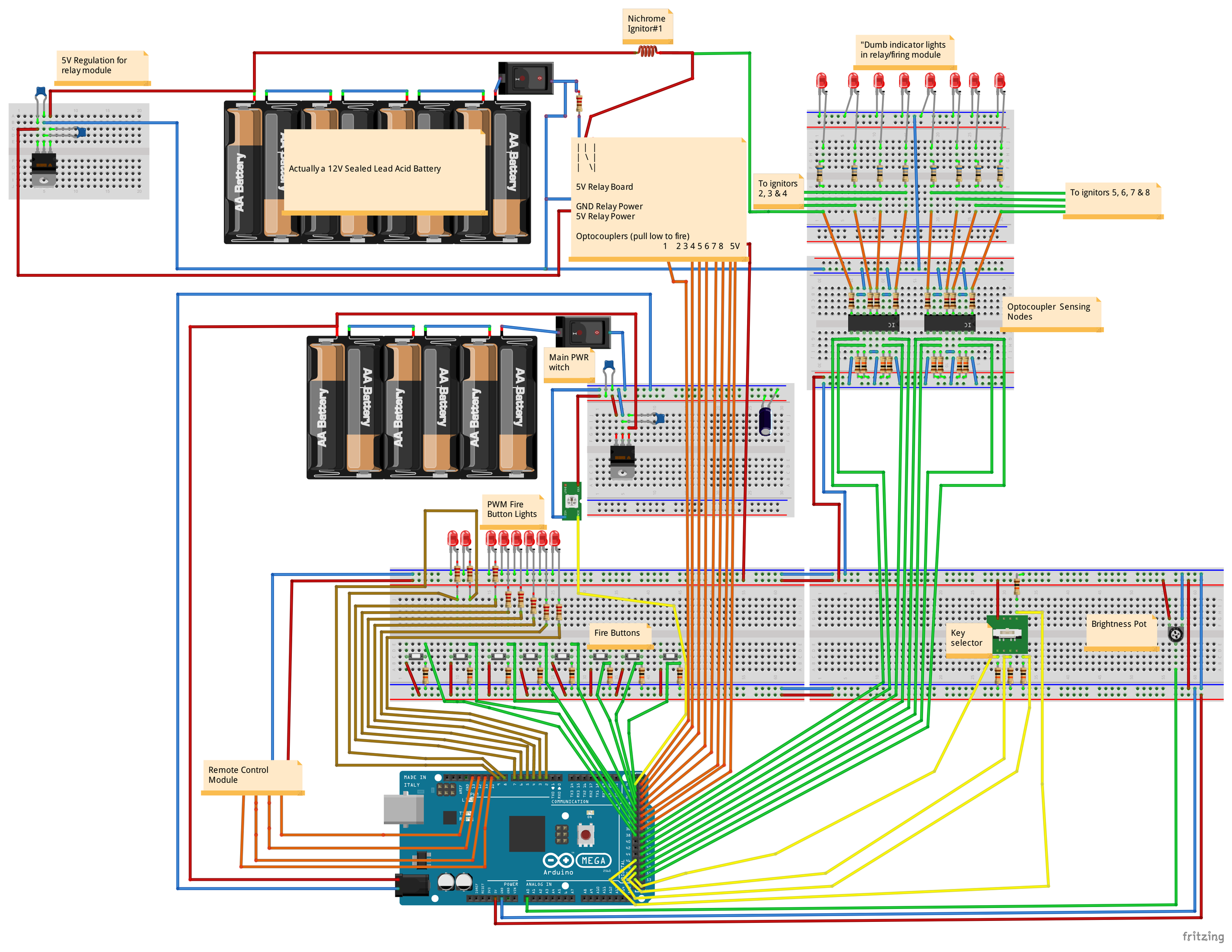
Nichrome Ignitor#1
5V Regulation for relay module
"Dumb indicator lights in relay/firing module
AA Battery
Actually a 12V Sealed Lead Acid Battery
5V Relay Board
GND Relay Power
5V Relay Power
Optocouplers (pull low to fire)
1 2 3 4 5 6 7 8 5V
To ignitors 2, 3 & 4
To ignitors 5, 6, 7 & 8
Optocoupler Sensing Nodes
Main PWR witch
PWM Fire Button Lights
Fire Buttons
Key selector
Brightness Pot
Remote Control Module
MADE IN ITALY
COMMUNICATION
MEGA
Arduino
POWER
ANALOG IN
fritzing