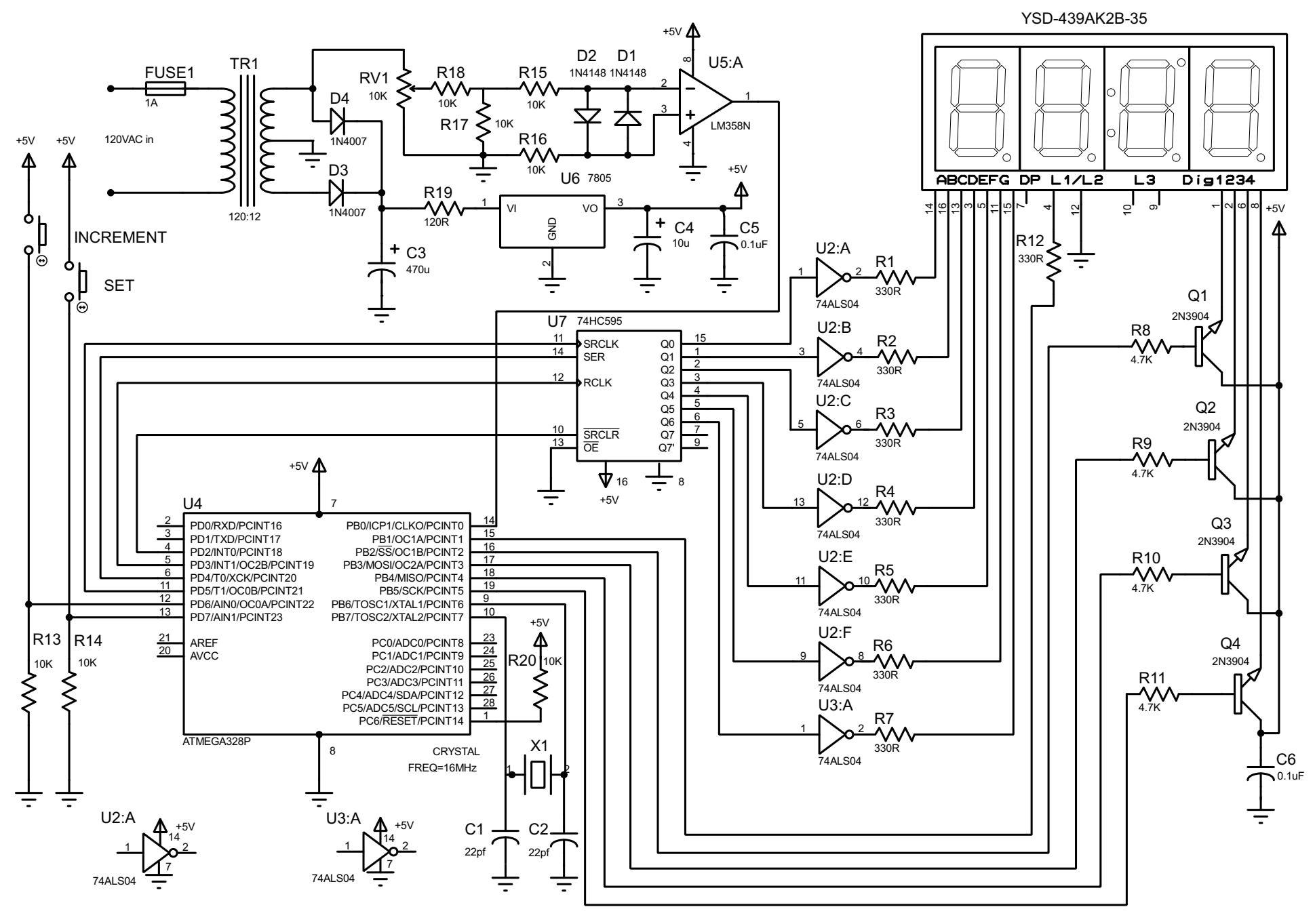
YSD-439AK2B-35
ABCDEFG DP L1/L2 L3 Dig1234
FUSE1
1A
TR1
120:12
120VAC in
D4
1N4007
D3
1N4007
RV1
10K
R18
10K
R17
10K
R15
10K
R16
10K
D2
1N4148
D1
1N4148
U5:A
LM358N
U6
7805
R19
120R
VI
VO
GND
C3
470u
C4
10u
C5
0.1uF
+5V
INCREMENT
SET
U7
74HC595
SRCLK
SER
RCLK
SRCLR
OE
Q0
Q1
Q2
Q3
Q4
Q5
Q6
Q7
Q7'
U4
ATMEGA328P
PD0/RXD/PCINT16
PD1/TXD/PCINT17
PD2/INT0/PCINT18
PD3/INT1/OC2B/PCINT19
PD4/T0/XCK/PCINT20
PD5/T1/OC0B/PCINT21
PD6/AIN0/OC0A/PCINT22
PD7/AIN1/PCINT23
AREF
AVCC
PB0/ICP1/CLKO/PCINT0
PB1/OC1A/PCINT1
PB2/SS/OC1B/PCINT2
PB3/MOSI/OC2A/PCINT3
PB4/MISO/PCINT4
PB5/SCK/PCINT5
PB6/TOSC1/XTAL1/PCINT6
PB7/TOSC2/XTAL2/PCINT7
PC0/ADC0/PCINT8
PC1/ADC1/PCINT9
PC2/ADC2/PCINT10
PC3/ADC3/PCINT11
PC4/ADC4/SDA/PCINT12
PC5/ADC5/SCL/PCINT13
PC6/RESET/PCINT14
R13
10K
R14
10K
R20
10K
X1
CRYSTAL
FREQ=16MHz
C1
22pf
C2
22pf
U2:A
U2:B
U2:C
U2:D
U2:E
U2:F
U3:A
74ALS04
R1
R2
R3
R4
R5
R6
R7
330R
R12
330R
Q1
Q2
Q3
Q4
2N3904
R8
R9
R10
R11
4.7K
C6
0.1uF