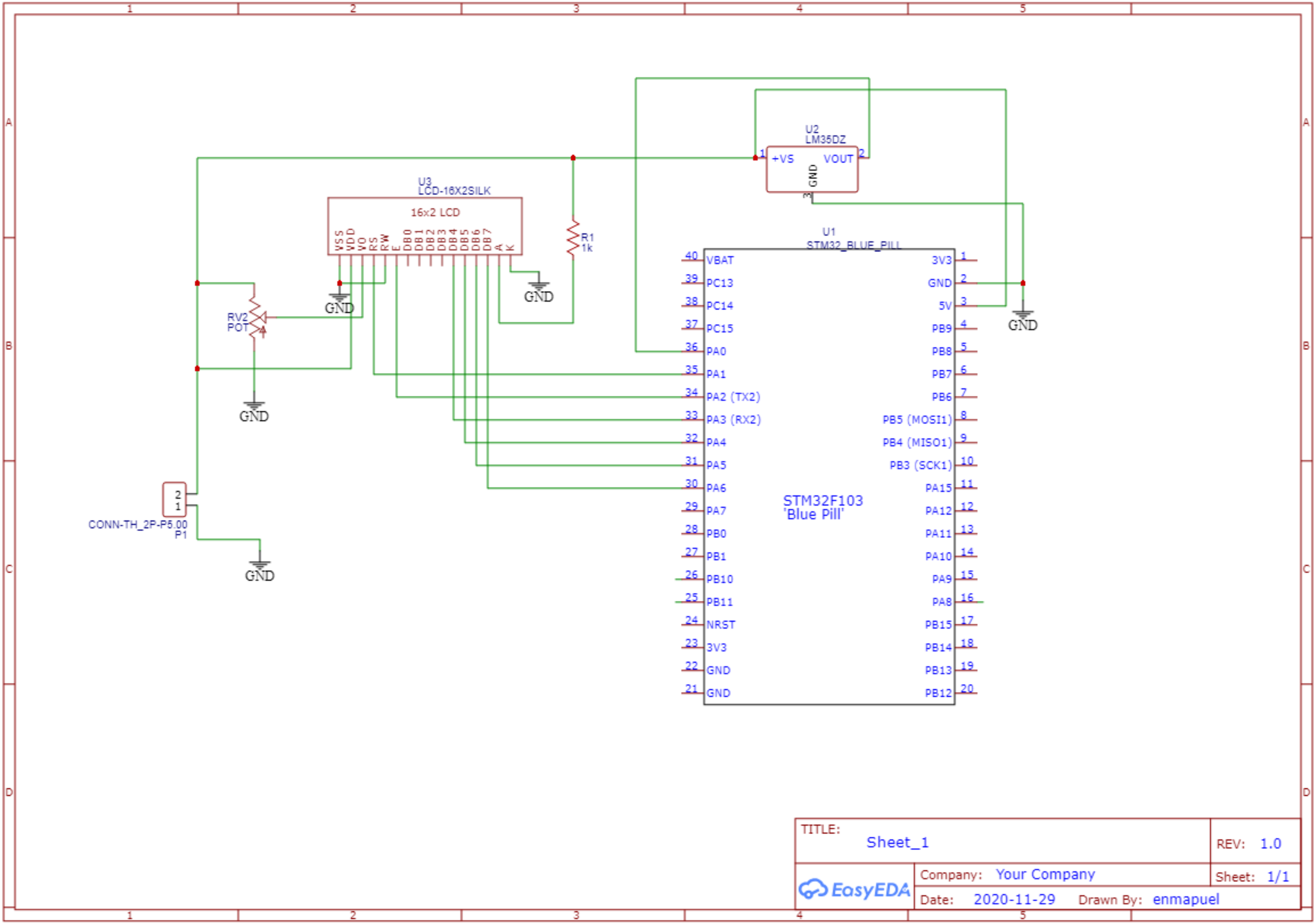
U2
LM35DZ
+VS
VOUT
GND
U3
LCD-16X2SILK
16x2 LCD
VSS VDD VO RS RW E DB0 DB1 DB2 DB3 DB4 DB5 DB6 DB7 A K
R1
1k
RV2
POT
GND
U1
STM32_BLUE_PILL
STM32F103
'Blue Pill'
VBAT
PC13
PC14
PC15
PA0
PA1
PA2 (TX2)
PA3 (RX2)
PA4
PA5
PA6
PA7
PB0
PB1
PB10
PB11
NRST
3V3
GND
GND
3V3
GND
5V
PB9
PB8
PB7
PB6
PB5 (MOSI1)
PB4 (MISO1)
PB3 (SCK1)
PA15
PA12
PA11
PA10
PA9
PA8
PB15
PB14
PB13
PB12
CONN-TH_2P-P5.00
P1
TITLE:
Sheet_1
REV: 1.0
Company: Your Company
Sheet: 1/1
Date: 2020-11-29
Drawn By: enmapuel
EasyEDA