BREADBOARD SCHEMATIC

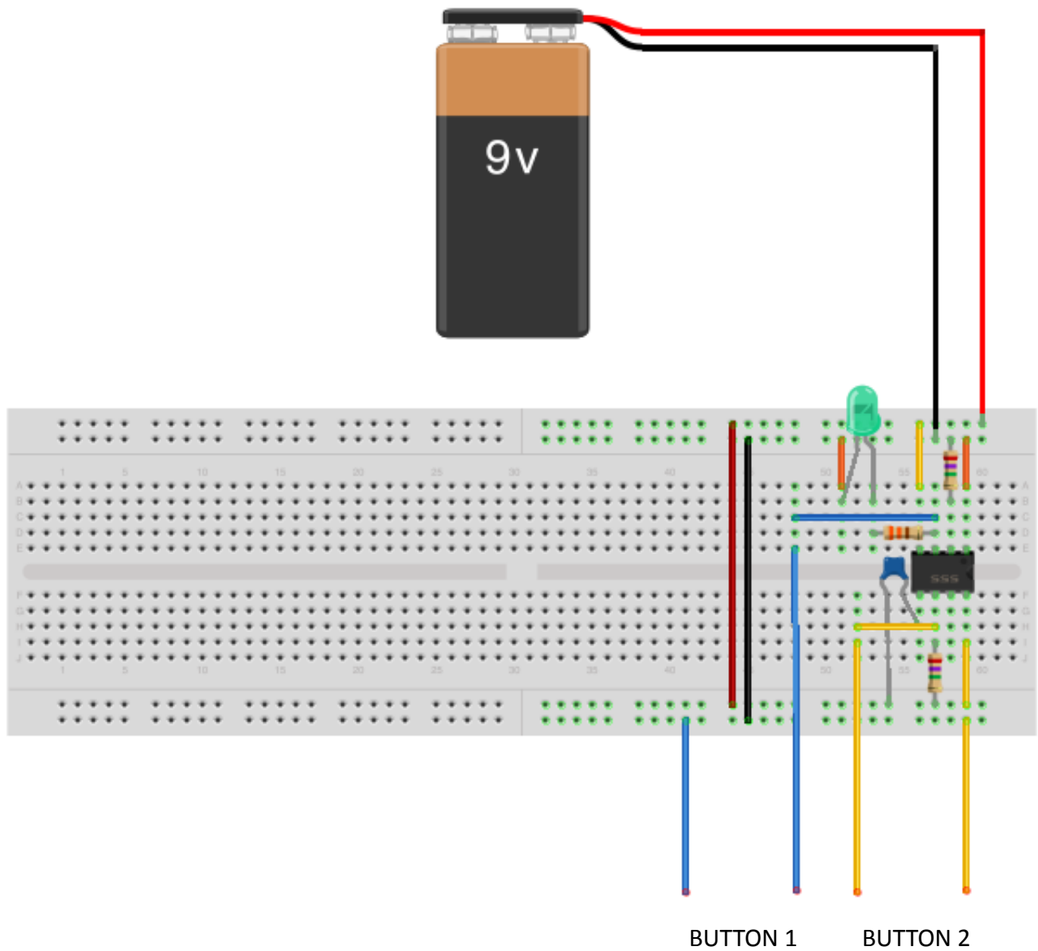

PAINT YOUR BUTTON GRAPHICS ON A NON-CONDUCTIVE SURFACE
AND THEN CONNECT TO THESE WIRES