MacroMitt

Macro Pad for AutoCAD

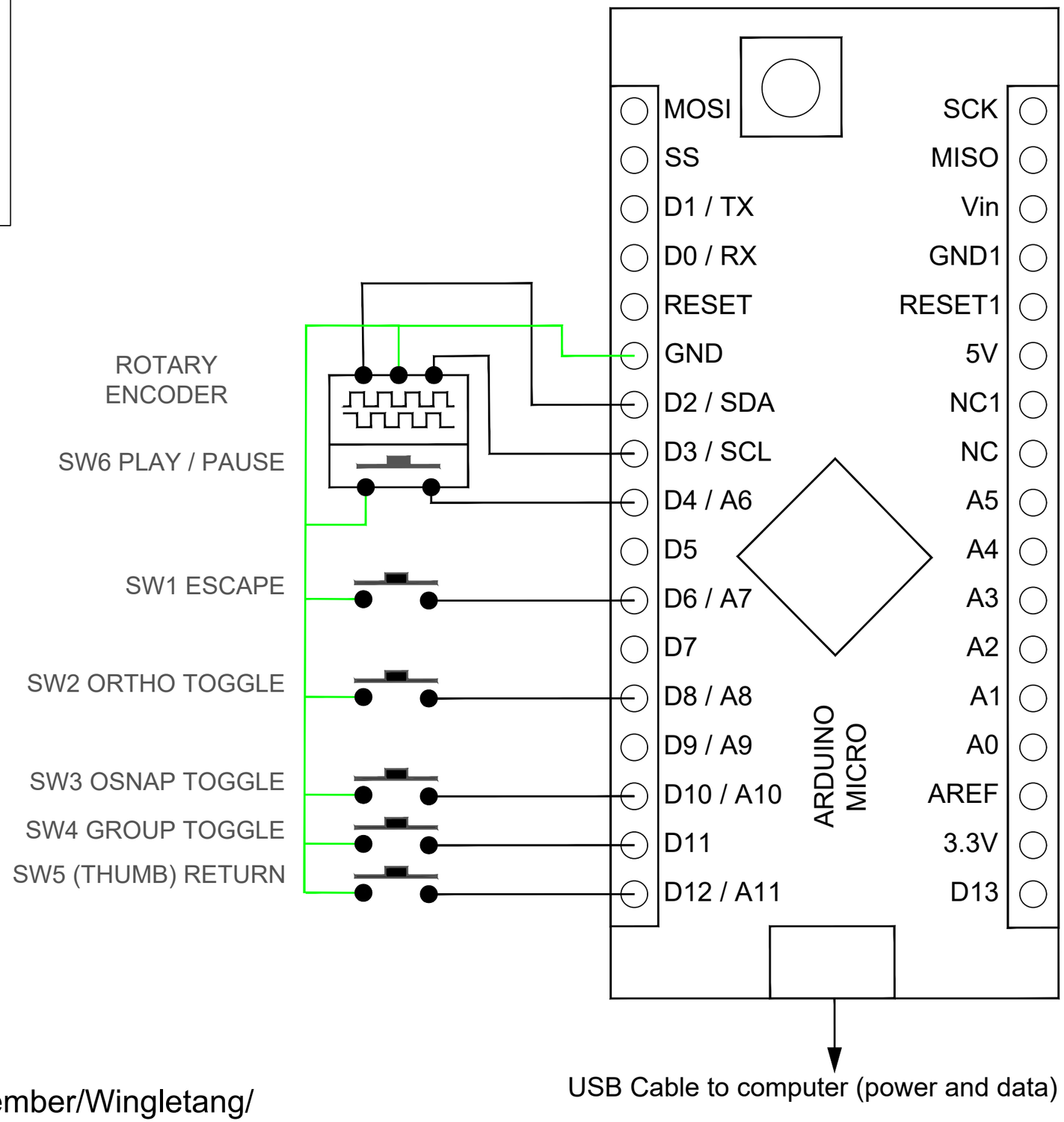

www.instructables.com/member/Wingletang/