AN6650 MOTOR SPEED CONTROL SCHEMATIC

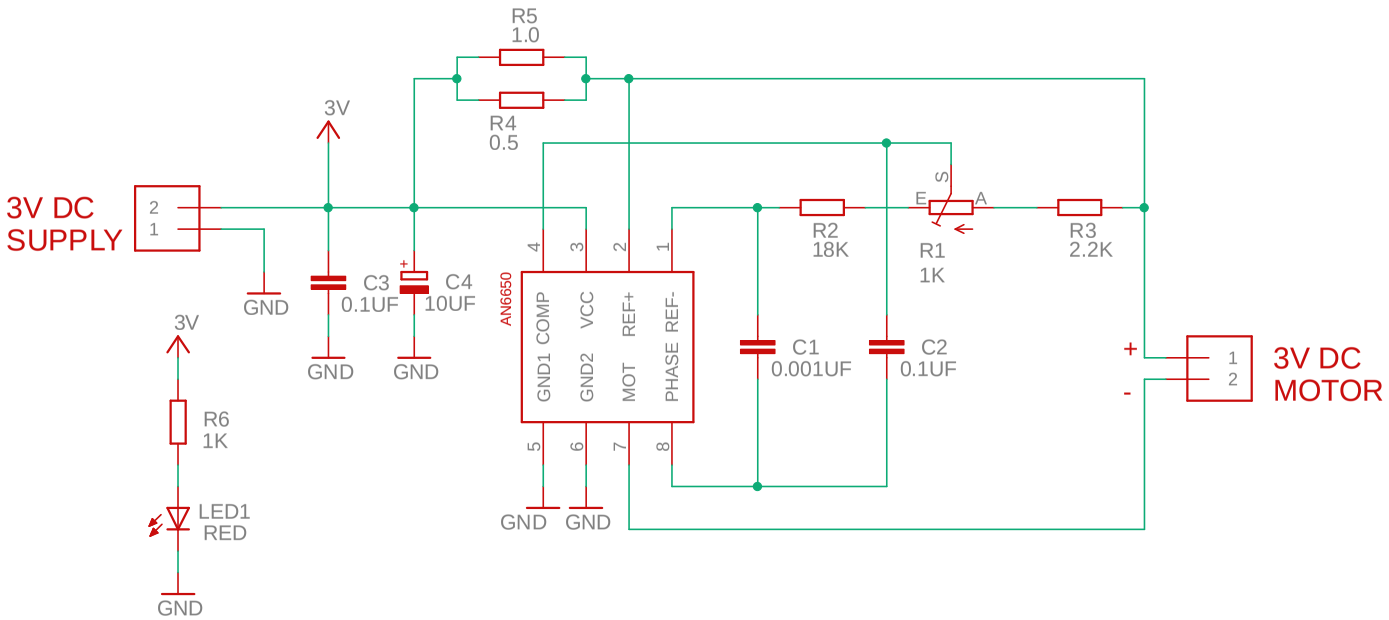

AN6650 MOTOR SPEED CONTROL

AUTODESK EAGLE	Ramji Patel376
	8/6/2021 12:33 AM
	Sheet: 1/1

8/6/2021 12:33 AM f=1.12 C:\Users\Lenovo\Documents\EAGLE\projects\AN6650\AN6650 MOTOR SPEED CONTROL.sch (Sheet: 1